Agilent Technologies

Vacuum Products Division

CE

IDP-10 Dry Scroll Vacuum Pump

INSTRUCTION MANUAL

Manual No. X3810-90000
Revision B
January 2017

JEVI VACUUM INSTRUMENTS

WWW.JEVINSTRUMENTS.COM

IDP-10
Dry Scroll Vacuum Pump

Slo-Blo and Littelfuse are registered trademarks of Littelfuse, Inc.

Copyright 2017
Agilent, Inc.

JEVI VACUUM INSTRUMENTS
WWW.JEVINSTRUMENTS.COM

Warranty

Products manufactured by Seller are warranted against defects in materials and workmanship for twelve (12) months from date of shipment thereof to Customer, and Seller's liability under valid warranty claims is limited, at the option of Seller, to repair, to replace, or refund of an equitable portion of the purchase price of the Product. Items expendable in normal use are not covered by this warranty. All warranty replacement or repair of parts shall be limited to equipment malfunctions which, in the sole opinion of Seller, are due or traceable to defects in original materials or workmanship. All obligations of Seller under this warranty shall cease in the event of abuse, accident, alteration, misuse, or neglect of the equipment. In-warranty repaired or replaced parts are warranted only for the remaining unexpired portion of the original warranty period applicable to the repaired or replaced parts. After expiration of the applicable warranty period, Customer shall be charged at the then current prices for parts, labor, and transportation.

Reasonable care must be used to avoid hazards. Seller expressly disclaims responsibility for loss or damage caused by use of its Products other than in accordance with proper operating procedures.

Except as stated herein, Seller makes no warranty, expressed or implied (either in fact or by operation of law), statutory or otherwise; and, except as stated herein, Seller shall have no liability under any warranty, expressed or implied (either in fact or by operation of law), statutory or otherwise. Statements made by any person, including representatives of Seller, which are inconsistent or in conflict with the terms of this warranty shall not be binding upon Seller unless reduced to writing and approved by an officer of Seller.

Warranty Replacement and Adjustment

All claims under warranty must be made promptly after occurrence of circumstances giving rise thereto, and must be received within the applicable warranty period by Seller or its authorized representative. Such claims should include the Product serial number, the date of shipment, and a full description of the circumstances giving rise to the claim. Before any Products are returned for repair and/or adjustment, written authorization from Seller or its authorized representative for the return and instructions as to how and where these Products should be returned must be obtained. Any Product returned to Seller for examination shall be prepaid via the means of transportation indicated as acceptable by Seller. Seller reserves the right to reject any warranty claim not promptly reported and any warranty claim on any item that has been altered or has been returned by non-acceptable means of transportation. When any Product is returned for examination and inspection, or for any other reason, Customer shall be responsible for all damage resulting from improper packing or handling, and for loss in transit, notwithstanding any defect or non-conformity in the Product. In all cases, Seller has the sole responsibility for determining the cause and nature of failure, and Seller's determination with regard thereto shall be final.

If it is found that Seller's Product has been returned without cause and is still serviceable, Customer will be notified and the Product returned at the Customer's expense; in addition, a charge for testing and examination may be made on Products so returned.

This page intentionally left blank.

Contents

Warranty iii
Warranty Replacement and Adjustment iii
Instructions for Use 1
General Information 1
Storage 1
EMC Warnings 2
Installation 3
Use 3
User Interface 4
Operation 5
Protection Features 5
Maintenance 6
Environmental Conditions, Compliance and Utility Requirements 7
Environmental Conditions 7
Electromagnetic Compatibility 7
South Korean Class A EMC declaration 7
ICES/NMB-001 7
Instructions d'utilisation 8
Informations générales 8
Conditionnement 8
Avertissements CEM 9
Installation 10
Utilisation 10
Interface de l'utilisateur 10
Opération 11
Fonctions de protection 12
Entretien 12
Mise au rebut 12
Technical Information 13
Unpacking and Inspection 15
Installation 16
Safety 16
Startup 16
Electrical Connections 17
Start Current 18
Mechanical Connections 19
Operation 20
Cleaning the Pump 20
Startup Procedure 20
Shutdown Procedure 20
Troubleshooting 21
Maintenance 22
Kits and Service Options 22
Cleaning 22
Tip Seal Replacement 22
Request for Return Health and Safety Certification

List of Figures

Figure	Caption	Page
1	DSUB9 Pin Connections	4
2	RPM. vs. 0-10 V Speed Control Signal	4
3	Raccordements des broches DSUB9	10
4	Outline Drawing with Dimensions	14
5	Pumping Speed Curves	14
6	Outline Drawing and Principal Items	15
7	Feet Label	15
8	Gas Ballast	19
9	ON/OFF Power Switch	20
10	Exploded View of Pump Body	23

List of Tables

Table	Title	Page
1	Impedance Characteristic	2
2	DSUB9 Pin Connections	4
3	Caractéristique de l'impédance	8
4	Raccordements des broches DSUB9	10
5	Specifications	13
6	IDP-10 Power Cord Selection	18
7	Typical IDP-10 Maximum Starting Current (A)	18
8	Troubleshooting Chart	21
9	Accessories and Replacement Kits	22
10	Service Options	22

JEVI VACUUM INSTRUMENTS
WWW.JEVINSTRUMENTS.COM

This page intentionally left blank.

Instructions for Use

General Information

This equipment is designed for use by trained personnel. The user should read this instruction manual and any other additional information supplied by Agilent before operating the equipment. Agilent will not be held responsible for any events that occur due to non-compliance with these instructions, improper use by untrained persons, non-authorized interference with the equipment, or any action contrary to that provided for by specific national standards.

The IDP-10 is a hermetic, dry scroll vacuum pump. This pump is suitable for pumping air or inert gases. The pump is not intended to pump corrosive, explosive, or particulate-forming gases.

The following paragraphs contain all the information necessary to guarantee the safety of the operator when using the equipment. Detailed information is supplied in "Technical Information" on page 13.

This manual uses the following standard safety protocol:

WARNING

The warning messages are for attracting the attention of the operator to a particular procedure or practice which, if not followed correctly, could lead to serious injury.

CAUTION

The caution messages are displayed before procedures, which if not followed, could cause damage to the equipment.

NOTE

The notes contain important information taken from the text.

Storage

When transporting and storing the pump, the following environmental requirements should not be exceeded:

Temperature:	−20 °C to +60 °C (−4 °F to 140 °F)
Relative humidity:	0 to 95% (non-condensing)

Preparation for Installation

The pump is supplied in a special protective packing. If this shows signs of damage, which may have occurred during transport, contact your local sales office.

Total weight of the packing, IDP-10 pump included, is approximately 28.1 kg (62 lbs).

WARNING

The IDP-10 pump itself weighs 24.7 kg (55 lbs). To avoid injury, use lifting aids and proper lifting techniques when moving the pump.

WARNING

When unpacking the pump, be sure not to drop it and avoid any kind of sudden impact or shock vibration to it.

NOTE

Normal exposure to the environment cannot damage the pump. Nevertheless, it is advisable to keep the pump inlet closed until the pump is installed in the system.

JEVI VACUUM INSTRUMENTS

WWW.JEVINSTRUMENTS.COM

EMC Warnings

EN 55011 Class A Warning

This is a Class A product. In a domestic environment this product may cause radio interference in which case the user may be required to take adequate measures.

The IDP-10 was tested with an I/O cable (for remote control) employing a clamp-on ferrite bead combined foil-braid shields and metal shell connectors with the shields connected to the IDP-10 chassis. Compliance with FCC Part 15 rules and the European Union's EMI requirements cannot be assured unless this type of I/O cable and ferrite bead is used.

Failure to install the unit in this way may result in the failure to meet the requirements for radiated emissions and susceptibility.

The ferrite bead must have the following characteristics:

- ❑ Ferrite type: Broadband
- ❑ Impedance characteristic (Table 1**).**

Table 1 Impedance Characteristic

Frequency (Mhz)	Nominal Impedance (Z)
25	25
100	250
300	420

- ❑ Large enough to fit over the cable being used.

FCC

This device complies with Part 15 of the FCC rules. Operation is subject to the following two conditions: (1) This device may not cause harmful interference, and (2) this device must accept any interference received, including interference that may cause undesirable operation.

NOTE

The equipment has been tested and found to comply with the limits for a Class A digital device, pursuant to Part 15 of the FCC rules. These limits are designed to provide reasonable protection against harmful interference when the equipment is operated in a commercial environment. This equipment generated, uses, and can radiate radio frequency energy and, if not installed and used in accordance with the instruction manual, may cause harmful interference to radio communications. Operation of this equipment in a residential area is also likely to cause harmful radio communications interference in which case the user will be required to correct the interference at his own expense.

Installation

The IDP-10 is designed and certified for operation indoors (installation category II) in relatively clean, dry environments (pollution degree 2). Refer to Table 5 for specifications. It is not designed nor certified for operation outdoors. The IDP-10 is NOT intrinsically safe and should never be used in dusty environments or with corrosive or flammable gases.

Connect the pump to the power supply using an IEC-320 style power cord.

CAUTION

During operation the following environmental conditions must be respected:

- *Temperature:+5 °C to +40 °C (41 °F to 104°F)*
- *Relative humidity:0 to 95% (non-condensing)*

Connect the pump to the power supply using an IEC-320 style power cord of at least 10 A capacity (See Table 6 on page 17).

CAUTION

When installing the vacuum pump it is recommended that the pump be positioned in a way that the power switch and power cord connection remain easily accessible to the user in order to be available as an option to disconnect power to the pump quickly if needed.

Use

The IDP-10 employs an inverter driven 3-phase motor so that pump speed is independent of AC mains frequency.

The pump has the following features:

- Local On/Off control via a user accessible slide switch
- Remote On/Off control via switch closure to ground though the Dsub9 I/O connector.
- LED hour meter which displays run time in hours
- Remote user control of pump speed through an analog input via the Dsub9 I/O connector.
- Automatic AC mains voltage sensing and selection for worldwide application.
- Automatic thermal sensing and shutdown for excessive temperature.
- Automatic power control under high pump loads.
- An optional inlet valve to protect vacuum systems from accidental venting should the pump shutdown unexpectedly.

User Interface

There is a slide switch, used for local manual operation of the pump, and a DSUB9 type connector with male pin contacts for both remote control and to allow you to vary the speed of the pump. The mating DSUB9 connector may be purchased from an external vendor. The specifications of the connector are as follows: Metal shell 9 Position D-Sub Receptacle with Female Socket contacts. See “EMC Warnings” on page 2 for information about required back-shells, cable, and ferrite bead.

The slide switch has two positions labeled as:

- *0*: This is the OFF position, the pump and fan. When in this position, the pump and fan are off and the optional inlet valve will be closed. The switch MUST be in this position to allow remote ON/OFF operation
- I: This is the ON position, the pump and the fan operates when in this position.

The DSUB9 connector (Figure 1) has pins for both remote ON/OFF control and to vary the pump speed. The pin assignments are inTable 2.

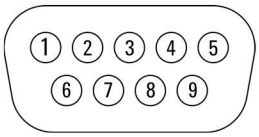

Figure 1 DSUB9 Pin Connections

Table 2 DSUB9 Pin Connections

Pin #	Function
1	Analog speed control input voltage 0-10 VDC
2	External pump On/Off input, active LO
3	NC
4	NC
5	Ground
6	NC
7	+10VDC output
8	Reserved for Factory use
9	Ground

Description of Pin Functions

- Pin#1: This pin can be used to control the speed of the pump by applying an analog voltage between 1 and either of the signal ground pins. The speed varies continuously from full speed of 1900 RPM at 10 VDC to 1350 RPM at 6.9 VDC. The pump runs at 1350 RPM for all voltages between 1.0 and 6.9 V. For voltages below 1 V or without an input the pump runs at full speed. Over speed is not provided. This pin has an input impedance of 10 Kohms.
- Pin#2: This is a TTL compatible logic input. Either a switch closure to signal ground, or a logic LO (referenced to signal ground) on this pin allows the pump to run. An open or logic HI turns the pump OFF. An internal pull-up resistor to +5 V is provided. Note: that the slide switch MUST be in the *0* position when using this input.
- Pin#5 and Pin#9: These two pins are connected to signal ground.
- Pin#7: This pin outputs a 10 VDC signal used when using a potentiometer for the speed control. When connecting the top of a potentiometer to this pin, the wiper to pin#1, and the other side of the potentiometer to one of the ground pins, you can easily vary the speed of the pump. A 5 Kohm potentiometer is recommended.
- Pin#8: Do not make any connection to this pin.
- Pin#9: Shell: Chassis ground. (The shell is NOT connected to the signal ground pins).

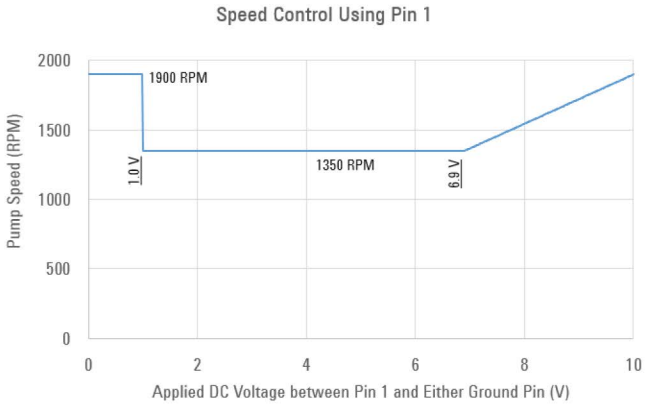

Figure 2 RPM. vs. 0-10 V Speed Control Signal

Operation

1. Mount the pump in its intended location and make the appropriate vacuum connections.
2. Ensure the slide switch is in the *0* position. If using the remote I/O connector, plug in the cable and tighten the connector screw-locks.

NOTE

When using the remote control, if the remote command is for the pump to be ON, the slide switch will no longer be able to be used to turn the pump OFF. However, for remote control to work properly, leave the slide switch in the OFF position.

NOTE

To maintain compliance with EMI regulations, a shielded cable must be used and the supplied snap-on ferrite bead installed onto the cable as close as possible to the IDP-10. A cable with both foil and braid shielding is recommended and must be attached per the connector manufacturer's instructions to backshells that are either metal or metalized.

3. Apply AC power by attaching an IEC320 C13 cord set to the pump. The LED hour meter lights. If the pump is new the display shows *0*.
4. Slide the switch to the *I* position or apply the remote ON signal. The pump starts after few seconds and the fan comes on.

   If the pump has the optional inlet valve, it opens in approximately 30 seconds and the IDP-10 begins pumping. If the valve is not present, pumping begins immediately.

   Because of the inverter drive, the pump comes up to speed over several seconds.

The hour meter counts and displays the number of hours the pump has been running with a resolution of one hour. This value is stored in non-volatile memory and can only be reset at the factory or authorized service center.

In order to reach maximum vacuum, the pump must be left running for at least 24 hours with the inlet sealed

WARNING

*The pump is designed for operation with neutral or noncorrosive fluids. The IDP-10 is **NOT** intrinsically safe and should never be used with potentially explosive or inflammable substances or in dusty environments.*

Stop the pump by sliding the switch to the *0* position or, if using the remote input, by applying a logic HI or open circuit to the remote input pin #2.

The optional inlet valve closes when the pump stops as long as vacuum is at the inlet.

Protection Features

The IDP-10 has several protection features:

- ❑ Overload control: When the pump is under heavy pump loads but otherwise able to run, such as pumping continuously at atmosphere or into a back pressure, the pump automatically reduces the motor speed after a time delay to reduce power dissipation. After running at this reduced speed for a fixed time, full speed is again allowed. The reduced speed setting is 1740 RPM.
- ❑ Overtemperature Protection: A thermistor is mounted to the motor housing that shuts off the power to the motor if the motor temperature reaches approximately 85° C. The fan continues running. Once the motor cools off, the pump turns on again automatically.
- ❑ Open Thermistor Detection: If the thermistor becomes open circuited or not plugged in, the pump is not allowed to run.
- ❑ Two stage overcurrent protection: To protect both the motor and the inverter drive, a two stage current limiting scheme has been implemented for overloads that may cause immediate damage to the pump or the inverter drive. When the current exceeds a fixed level the pump slows down drastically, or even stops, but then comes back up to speed automatically. This allows the pump to try to recover from moderate overloads. If the overload is more severe, such as with a locked rotor condition, safety is a concern, the motor is shutoff until the you slide the switch to the *0* position or turn the pump OFF using the remote input.

Maintenance

Personnel responsible for pump operation and maintenance must be well-trained and aware of the accident prevention rules.

WARNING

- ❑ *Death may result from contact with high voltages. Always take extreme care and observe the accident prevention regulations in force.*
- ❑ *When machine is powered up, be careful of moving parts and high voltages.*
- ❑ *If you have to perform maintenance on the pump after a considerable time in operation, allow it to cool as the temperature of the outer surface may be in excess of 60 °C.*
- ❑ *Always disconnect your power supply to the pump before beginning maintenance work.*

NOTE

Before returning the pump to the factory for repair, the "Request for Return" sheet attached to this instruction manual must be completed and sent to the local sales office. A copy of the sheet must be inserted in the pump package before shipping.

If a pump is to be discarded, it must be disposed of in accordance with specific national standards.

Disposal

Meaning of the *WEEE* logo found in labels

The following symbol is applied in accordance with the EC WEEE (Waste Electrical and Electronic Equipment) Directive. This symbol (valid only in countries of the European Community) indicates that the product it applies to must NOT be disposed of together with ordinary domestic or industrial waste but must be sent to a differentiated waste collection system.

The end user is therefore invited to contact the supplier of the device, whether the Parent Company or a retailer, to initiate the collection and disposal process after checking the contractual terms and conditions of sale.

For more information refer to: http://www.agilent.com/ environment/ product/ index.shtml.

Environmental Conditions, Compliance and Utility Requirements

Environmental Conditions

This equipment meets the following IEC classifications:

- ❑ Pollution Degree 2 (See Note.)
- ❑ Installation Category II (See Note.)
- ❑ Equipment Class 1

NOTE

Pollution level describes the degree to which a solid, liquid, or gas which deteriorates dielectric strength is adhering. 2 applies to a normal indoor atmosphere.

Installation category implies the regulation for impulse withstand voltage. It is also called the Over voltage category. II applies to electrical equipment.

This equipment requires the following space for ventilation, maintenances access, and easy access to the Main Power Breaker Switch. There must be a clear space of at least 60 cm (24") on all sides of the equipment. The bench in your laboratory must be able to support the entire system and other laboratory equipment.

Electromagnetic Compatibility

EN55011/CISPR11

Group 1 ISM equipment: Group 1 contains all ISM equipment in which there is intentionally generated and/or used conductively coupled radio-frequency energy which is necessary for the internal functioning of the equipment itself.

Class A equipment is equipment suitable for use in all establishments other than domestic and those directly connected to a low voltage power supply network which supplies buildings used for domestic purposes.

This device complies with the requirements of CISPR11, Group 1, Class A as radiation professional equipment. Therefore, there may be potential difficulties in ensuring electromagnetic compatibility in other environments, due to conducted as well as radiated disturbances.

Operation is subject to the following two conditions:

- ❑ This device may not cause harmful interference.
- ❑ This device must accept any interference received, including interference that may cause undesired operation.

If this equipment does cause harmful interference to radio or television reception, which can be determined by turning the equipment off and on, the user is encouraged to try one or more of the following measures:

- ❑ Make sure that appropriate cables are used to connect the device to peripheral equipment.
- ❑ Changes or modifications not expressly approved by Agilent Technologies could void the user's authority to operate the equipment.

South Korean Class A EMC declaration

This equipment is Class A suitable for professional use and is for use in electromagnetic environments outside of the home.

A 급 기기
(업무용 방송통신기자재)

이 기기는 업무용 (A 급) 전자파적합기기로서 판매자 또는 사용자는 이 점을 주의하시기 바라며 , 가정외의 지역에서 사용하는 것을 목적으로 합니다 .

ICES/NMB-001

This ISM device complies with Canadian ICES-001.

Cet appareil ISM est conforme à la norme NMB-001 du Canada.

JEVI VACUUM INSTRUMENTS

WWW.JEVINSTRUMENTS.COM

Instructions d'utilisation

Informations générales

Cet équipement est destiné à être utilisé par un personnel formé. L'utilisateur doit lire ce manuel d'instructions et toute autre information supplémentaire fournie par Agilent avant d'utiliser l'équipement. Agilent ne sera pas tenu responsable en cas d'événement se produisant en raison de la non-conformité à ces instructions, de l'utilisation inappropriée par des personnes non formées, de l'interférence non autorisée avec l'équipement ou de toute action contraire à ce qui est énoncé par les normes nationales spécifiques.

L'IDP-10 est une pompe à vide à spirales à sec hermétique. Cette pompe est adaptée au pompage de l'air ou des gaz inertes. La pompe n'est pas conçue pour pomper les gaz corrosifs, explosifs, ou à formation de particules.

Les paragraphes suivants comprennent toutes les informations nécessaires afin de garantir la sécurité de l'opérateur lors de l'utilisation de l'équipement. Des informations détaillées sont fournies dans le paragraphe "Informations techniques" à laTable 5 on page 13.

Ce manuel utilise le protocole de sécurité standard suivant:

AVERTISSEMENT

Les messages d'avertissement ont pour but d'attirer l'attention de l'opérateur sur une procédure ou pratique particulière qui, si elle n'est pas correctement suivie, pourrait provoquer des blessures graves.

ATTENTION

Les messages d'attention sont affichés avant les procédures, qui, si elles ne sont pas suivies, pourraient endommager l'équipement.

REMARQUE

Les remarques contiennent les informations importantes prises du texte.

Conditionnement

Lors du transport et du conditionnement de la pompe, les exigences environnementales suivantes ne doivent pas être dépassées.

Température:	−20 °C à +60 °C (−4 °F à 140 °F)
Humidité relative:	0 à 95% (non-condensation)

Préparation pour l'installation

La pompe est livrée dans un emballage protecteur spécial. Si elle manifeste des signes de dommages, qui peuvent s'être produits lors du transport, contactez votre bureau des ventes local.

Le poids total de l'emballage, pompe IDP-10 incluse, est d'environ 28,1 kg.

AVERTISSEMENT

La pompe IDP-10 elle-même pèse 24,5 kg. Pour éviter les blessures, utilisez les supports de levage et les techniques de levage appropriés lors du déplacement de la pompe.

AVERTISSEMENT

Lorsque vous déballez la pompe, assurez-vous de ne pas la faire tomber et évitez tout genre d'impact soudain ou de vibration de choc dessus.

REMARQUE

L'exposition normale à l'environnement ne peut endommager la pompe. Néanmoins, il est conseillé de garder le conduit d'entrée de la pompe fermé jusqu'à ce que la pompe soit installée dans le système.

JEVI VACUUM INSTRUMENTS

WWW.JEVINSTRUMENTS.COM

Avertissements CEM

Avertissement Classe A EN 55011

Il s'agit d'un produit de la Classe A. Dans un environnement domestique, ce produit peut causer une radio interférence, auquel cas l'utilisateur pourrait devoir prendre les mesures adéquates.

L'IDP-10 a été testée avec un câble E/S (pour la commande distante), en employant une perle ferrite à pince, des blindages feuille-tresse et des connecteurs en métal combinés à des blindages raccordés au châssis de l'IDP-10. La conformité aux règles de la Partie 15 de la FCC et aux exigences de l'EMI de l'Union européenne ne peut être assurée à moins que ce type de câble E/S et de perle ferrite ne soit utilisé.

L'omission d'installer l'unité de cette manière peut provoquer un défaut de conformité aux exigences concernant les émissions irradiées et la susceptibilité.

Cette perle ferrite doit avoir les caractéristiques suivantes:

- ❑ Type de ferrite : à haut débit
- ❑ Caractéristique de l'impédance (Table 3**).**

Table 3 Caractéristique de l'impédance

Fréquence (Mhz)	Impédance nominale (Z)
25	25
100	25
300	420

- ❑ Assez large pour intégrer le câble étant utilisé.

FCC

Cet appareil est conforme à la Partie 15 des règles de la FCC. L'opération est sujette aux deux conditions suivantes : (1) ce dispositif ne provoque pas d'interférence nuisible, et (2) ce dispositif doit accepter toute interférence reçue, y compris l'interférence pouvant provoquer une opération indésirable.

REMARQUE

L'équipement a été testé et déclaré conforme aux limites d'un dispositif numérique de Classe A, selon la Partie

15 des règles de la FCC. Ces limites sont destinées à fournir une protection raisonnable contre l'interférence nuisible lorsque l'équipement est utilisé dans un environnement commercial. Cet équipement généré, utilise, et peut irradier une énergie fréquence radio et, s'il n'est pas installé et utilisé conformément au manuel d'instructions, peut provoquer une interférence nuisible aux communications radio. L'utilisation de cet équipement dans une zone résidentielle est également susceptible de causer une interférence nuisible des communications radio.

Auquel cas, l'utilisateur devra corriger l'interférence à ses propres frais.

Installation

L'IDP-10 est conçue et certifiée pour une opération à l'intérieur (catégorie d'installation 1) dans des environnements relativement propres, secs (degré de pollution 2). Se reporter au Table 3 on page 9 pour les spécifications. Elle n'est pas conçue ni certifiée pour une utilisation à l'extérieur. L'IDP-10 n'est PAS intrinsèquement sûre et ne doit jamais être utilisée dans des environnements poussiéreux ou avec des gaz corrosifs ou inflammables.

Branchez la pompe au bloc d'alimentation en utilisant un câble électrique de style CEI-320.

ATTENTION

Lors de l'installation de la pompe à vide, il est recommandé que la pompe soit positionnée d'une manière à ce que le l'interrupteur et le câble électrique restent facilement accessibles à l'utilisateur afin d'être disponibles en option pour couper rapidement l'alimentation de la pompe, si nécessaire.

Utilisation

L'IDP-10 emploie un moteur triphasé entraîné par onduleur pour que la vitesse de la pompe soit indépendante de la fréquence des distributions CA.

La pompe dispose des caractéristiques suivantes:

- ❑ Commande On/Off locale via un interrupteur coulissant accessible par l'utilisateur
- ❑ Commande On/Off distante via fermeture d'interrupteur pour la mise à la terre à travers le connecteur E/S Dsub9
- ❑ Compteur horaire qui affiche le temps de marche en heures
- ❑ Commande de l'utilisateur distante de la vitesse de la pompe à travers une entrée analogique via le connecteur E/S Dsub9
- ❑ Détection automatique de la tension des distributions CA et sélection pour l'application mondiale
- ❑ Détection thermique automatique et arrêt pour température excessive
- ❑ Commande électrique distante sous les charges élevées de la pompe
- ❑ Vanne d'admission en option pour protéger les systèmes de vide de la ventilation accidentelle si la pompe s'arrête à l'improviste

Interface de l'utilisateur

Il y a un interrupteur coulissant, utilisé pour l'opération manuelle locale de la pompe et un connecteur de type DSUB9 avec les contacts de broche mâles pour la commande distante et pour vous permettre de changer la vitesse de la pompe.

L'interrupteur coulissant a deux positions identifiées comme:

- ❑ 0 : Il s'agit de la position OFF, la pompe et le ventilateur. Dans cette position, la pompe et le ventilateur sont éteints et La vanne d'admission sera fermée. Le commutateur DOIT être dans cette position pour permettre le fonctionnement ON/OFF distant.
- ❑ I : Il s'agit de la position ON, la pompe et le ventilateur fonctionnent lorsqu'ils sont dans cette position.

Le raccord DSUB9 (Figure 3) comprend des broches pour la commande ON/OFF distante et pour changer la vitesse de la pompe. Les affectations des broches figurent dans le Figure 4.

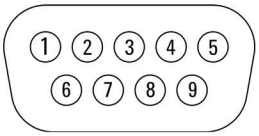

Figure 3 Raccordements des broches DSUB9

Table 4 Raccordements des broches DSUB9

Pin #	Function
1	Tension d'entrée de commande de vitesse analogique 0-10 Vcc
2	Entrée On/Off de la pompe externe, CHR active
3	NC
4	NC
5	Sol
6	NC
7	Sortie +10Vcc
8	Réservé pour une utilisation à l'usine
9	Sol

Description des fonctions de la broche

- Broche n°1 : cette broche peut être utilisée pour contrôler la vitesse de la pompe en appliquant une tension analogique entre 1 et l'une des broches de masse. La vitesse varie continuellement à la pleine vitesse de 1900 TR/M à 10 Vcc jusqu'à 1350 TR/M à 6,9 Vcc. La pompe fonctionne à 1350 TR/M pour toutes les tensions entre 1,0 et 6,9 V. Pour les tensions inférieures à 1 V ou sans conduit d'entrée, la pompe fonctionne à pleine vitesse.
  La survitesse n'est pas fournie.
- Broche n°2 : il s'agit d'une entrée logique compatible TTL. Soit une fermeture d'interrupteur au sol, ou une logique faible sur cette broche permet à la pompe de fonctionner. Un HI ouvert ou logique éteint la pompe. Une résistance pull-up interne de +5 V est fournie. Notez que l'interrupteur coulissant DOIT être dans la position 0 lorsque vous utilisez cette sortie.
- Broche n°5 et Broche n°9 : ces deux broches sont raccordées à la terre de signalisation.
- Broche n°7 : cette broche émet un signal de 10 Vcc utilisé lors de l'utilisation d'un potentiomètre pour le contrôle de la vitesse. Lorsque vous raccordez le haut d'un potentiomètre à cette broche, l'essuie-glace à la broche n°1, et l'autre côté du potentiomètre à une broche de masse, vous pouvez facilement changer la vitesse de la pompe. Un potentiomètre de 5 kohm est recommandé.
- Broche n°8 : n'effectuez pas de raccordement à cette broche.
- Broche n°9 : enveloppe : masse du châssis :

Opération

1. Montez la pompe dans son emplacement et effectuez les branchements de vide appropriés.
2. Assurez-vous que l'interrupteur coulissant soit dans la position 0. Si vous utilisez le connecteur E/S distant, branchez le câble et serrez les vis de blocage du connecteur.

REMARQUE *Lorsque vous utilisez la commande distante, si cette dernière est pour la pompe allumée, l'interrupteur coulissant ne pourra plus être utilisé pour éteindre la pompe. Cependant, pour que la commande distante fonctionne correctement, laissez l'interrupteur coulissant dans la position OFF.*

REMARQUE *Pour maintenir la conformité aux règlementations EMI, un câble blindé doit être utilisé et la perle ferrite à fixation immédiate fournie installée sur le câble aussi près que possible de l'IDP-10. Un câble avec un blindage par feuille et tresse est recommandé et doit être fixé selon les instructions du fabricant du connecteur aux raccords qui sont soit en métal ou métallisés.*

3. Appliquez une puissance CA en fixant un jeu de câbles CEI320 C13 à la pompe. Le compteur horaire LED s'allume. Si la pompe est neuve, l'écran affiche 0.
4. Faites glisser l'interrupteur à la position I ou appliquez le signal ON distant. La pompe démarre après quelques secondes et le ventilateur s'allume.

Si la pompe dispose de la vanne d'admission en option, elle s'ouvre dans environ 30 secondes et l'IDP-10 commence à pomper. Si la pompe n'est pas présente, le pompage commence immédiatement.

En raison du convertisseur, la pompe atteint une vitesse après plusieurs secondes.

Le compteur horaire compte et affiche le nombre d'heures de marche de la pompe avec une résolution d'une heure. Cette valeur est stockée dans une mémoire non-volatile et peut seulement être redéfinie à l'usine ou par un centre de service autorisé.

Afin d'atteindre le vide maximal, la pompe doit être laissée en marche pendant au moins 24 heures avec le conduit d'entrée scellée.

AVERTISSEMENT *La pompe est conçue pour un fonctionnement avec des fluides neutres ou non corrosifs. L'IDP-10 n'est **PAS** intrinsèquement sûre et ne doit jamais être utilisée avec des substances potentiellement explosives ou inflammables ou dans des environnements poussiéreux.*

Arrêtez la pompe en faisant glisser l'interrupteur à la position 0 ou, si vous utilisez l'entrée à distance, en appliquant un HI logique ou un circuit ouvert à la broche d'entrée à distance n°2.

La vanne d'admission en option se ferme lorsque la pompe s'arrête aussi longtemps que le vide soit à l'entrée.

Fonctions de protection

L'IDP-10 a plusieurs fonctions de protection:

- Contrôle de la surcharge : lorsque la pompe est sous des charges lourdes mais qu'elle peut fonctionner, comme le pompage continuel à l'air libre ou dans une contre-pression, la pompe réduit automatiquement la vitesse du moteur après un délai de temps pour diminuer la dissipation électrique. Après une marche à cette vitesse réduite pendant un temps fixe, la pleine vitesse est de nouveau autorisée. Le réglage de la vitesse réduite est de 1740 TR/M.
- Protection contre la température excessive : une thermistance est montée sur le boîtier moteur qui coupe le courant du moteur si la température de ce dernier atteint environ 85°C. Le ventilateur continue de fonctionner. Une fois que le moteur se refroidit, la pompe s'allume de nouveau automatiquement.
- Détection de thermistance ouverte : si la thermistance a un circuit ouvert ou qu'elle n'est pas branchée, la pompe ne doit pas être en marche.
- Protection de la surintensité à deux étapes : pour protéger le moteur et le convertisseur, un régime de limitation du courant à deux étapes a été mis en place pour les surcharges pouvant causer un dommage immédiat à la pompe ou au convertisseur. Lorsque le courant dépasse un niveau fixe, la pompe ralentit considérablement, voire s'arrête, mais revient ensuite automatiquement à la vitesse. Cela permet à la pompe d'essayer de se rétablir des surcharges modérées. Si la surcharge est plus grave, comme avec une condition de rotor bloqué, la sécurité pose problème, le moteur est arrêté jusqu'à ce que vous fassiez glisser l'interrupteur à la position 0 ou éteigniez la pompe en utilisant l'entrée à distance.

Entretien

Le personnel responsable de l'opération et de l'entretien de la pompe doit être bien formé et conscient des règles de prévention des accidents.

JEVI VACUUM INSTRUMENTS

WWW.JEVINSTRUMENTS.COM

AVERTISSEMENT *La mort peut résulter d'un contact avec des tensions élevées. Faites toujours extrêmement attention et respectez les règlementations de prévention des accidents en vigueur.*

Lorsque la machine est sous tension, faites attention aux pièces en mouvement et aux tensions élevées.

Si vous devez effectuer un entretien sur la pompe après un temps considérable d'utilisation, laissez-la refroidir car la température de la surface extérieure peut dépasser les 60°C.

Débranchez toujours votre bloc d'alimentation de la pompe avant de commencer le travail d'entretien.

Mise au rebut

Signification du logo WEEE figurant sur les étiquettes.

Le symbole ci-dessous est appliqué conformément à la directive CE nommée " WEEE ". Ce symbole (uniquement valide pour les pays de la Communauté européenne) indique que le produit sur lequel il est appliqué NE doit PAS être mis au rebut avec les ordures ménagères ou les déchets industriels ordinaires, mais passer par un système de collecte sélective.

Après avoir vérifié les termes et conditions du contrat de vente, l'utilisateur final est donc prié de contacter le fournisseur du dispositif, maison mère ou revendeur, pour mettre en œuvre le processus de collecte et mise au rebut.

Pour en savoir plus, consulter:

http://www.agilent.com/environment/product/index.shtml.

REMARQUE *Avant de retourner la pompe à l'usine pour réparation, la feuille " Santé et Sécurité " jointe à ce manuel d'instructions doit être remplie et envoyée au bureau des ventes local. Une copie de la feuille doit être insérée dans l'emballage de la pompe avant l'expédition.*

Si une pompe doit être mise au rebut, elle doit être jetée conformément aux normes nationales spécifiques.

JEVI VACUUM INSTRUMENTS
WWW.JEVINSTRUMENTS.COM

Technical Information

Table 5 Specifications

Model	IDP-10 Dry Scroll Single Hermetic Vacuum Pump
Interface dimensions	H=297 mm x W=260 mm x L= 420mm
Peak pumping speed	Default factory setting: 63.3 Hz: 1900 RPM, 170 L/min (10.2 m^3/h)
Media	No corrosive, explosive or particulate forming gases
Ultimate pressure*	1.5 x 10^{-2} Torr (2.0 x 10^{-2} mbar)
Maximum recommended continuous inlet pressure	300 Torr (400 mbar)
Maximum inlet pressure at nominal voltage	1.0 atmosphere (0 psig)
Maximum outlet pressure	115V range: 5 psig, 115 VAC 50/60HZ or greater, derate linearly to 0 psig at 100VAC below 115VAC 230V range: 5 pisg, 200 VAC 50/60HZ or greater
Inlet connection	NW25
Exhaust connection	Female 1/4" National Pipe Thread (NW16)
Gas ballast	Female 1/8" National Pipe Thread, (20 micron sintered plug provided)
Ambient operating temperature	5 °C to 40 °C (41 °F to 104 °F)
Storage temperature	–20 °C to 60 °C (–4 °F to 140 °F)
Motor rating	1/2 HP (370 W)
Operating voltages**	Operates with inverter - functions with several power inputs: 1 phase/100-120VAC 50/60Hz, 9 A typical; 200-240 50/60Hz, 5 A typical
Motor thermal protection	Automatic thermal protection
Operating speed	Full Speed 1900 (factory set) RPM; user variable from 1350 to 1900 RPM
Cooling system	Air-cooled
Weight	Pump only: 24.7 kg (55 lbs) Shipping weight: 28.1 kg (62 lbs)
Leak rate (with exhaust sealed)	<1 x 10^{-7} sccs helium
Noise Level (per ISO 11201)	53 +/- 2 dB(A)
Vibration level at inlet (per ISO 10816-1)	Class 1B, 7 mm/s
Fuse type	M5 x 20 mm, 10 A, Slo-Blo, Littelfuse Model 215010 or equivalent, not user replaceable
Hour meter	Integral hour meter provided, displays running time to closest 1 hour
Conformance standards	Conforms to EN61010 3rd edition, CSA 22.2 for US and Canada, CE marked.
Installation	Indoor use, Installation Category II, Pollution Degree 2
Altitude	2000 m (6562')
Emissions and Immunity	EN 61236-1:2006 as a Class A device
Water Vapor Handling	120 g/hr
Ambient Relative Humidity	5-95%; non-condensing
Safety	EN /IEC 61010 3rd Edition CSA certified for US and Canada

*If the pump and/or vacuum system is new, or has been exposed to atmosphere for an extended period of time, it is possible that water can be present which can affect the pump's ability to achieve ultimate pressure. To remove water from the system it is recommended to open GB1 for 15 minutes and/or flush with dry nitrogen.
**Mains supply voltage fluctuations shall not exceed 10% of the nominal voltage.

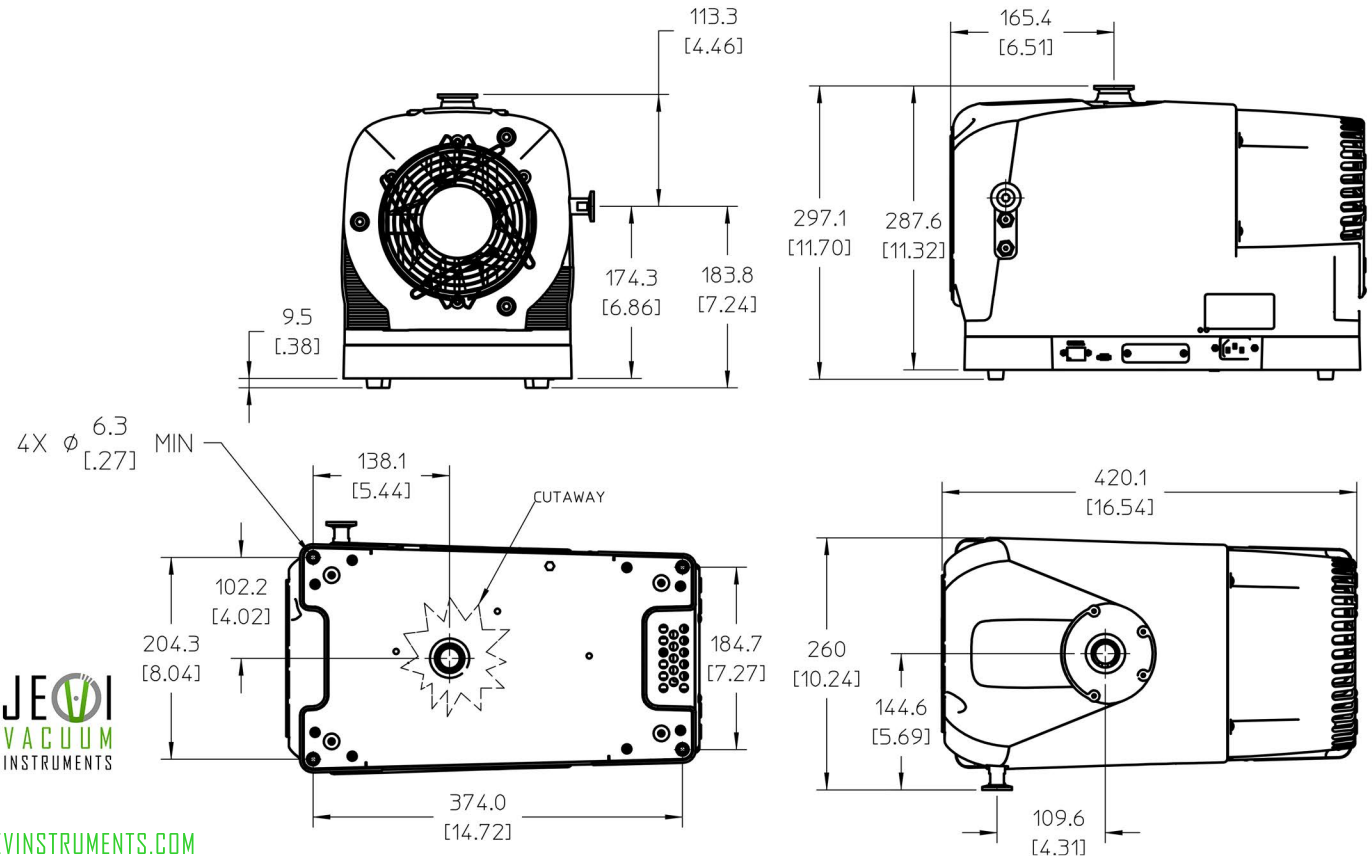

Figure 4 Outline Drawing with Dimensions

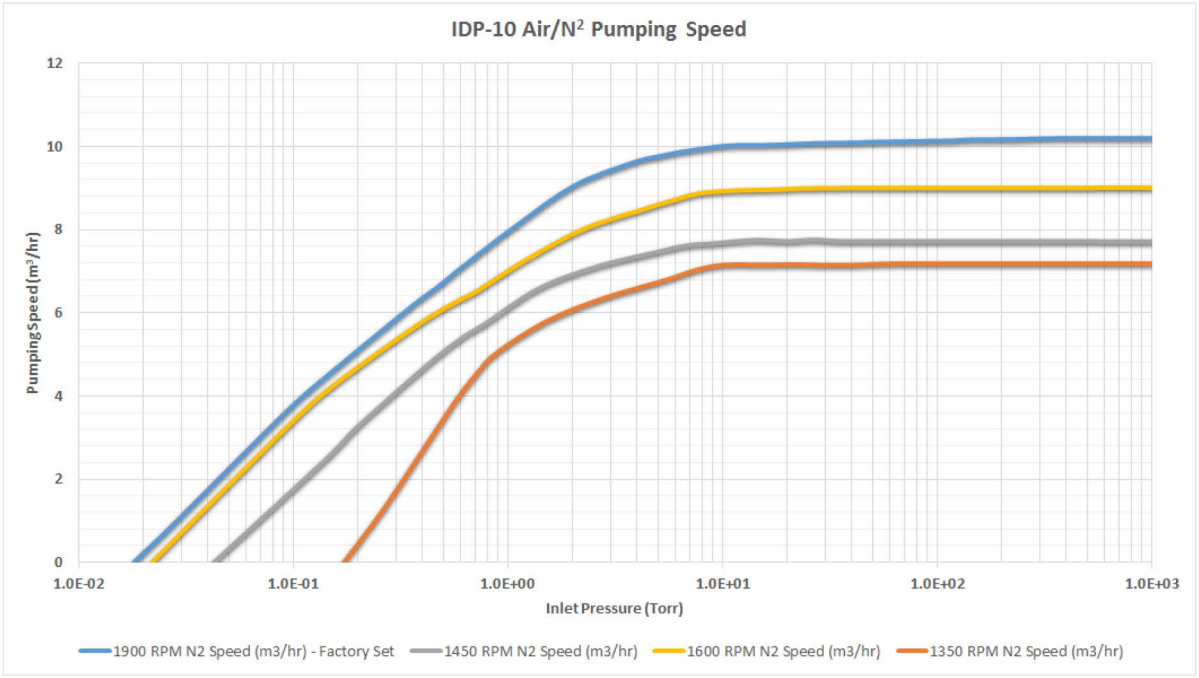

Figure 5 Pumping Speed Curves

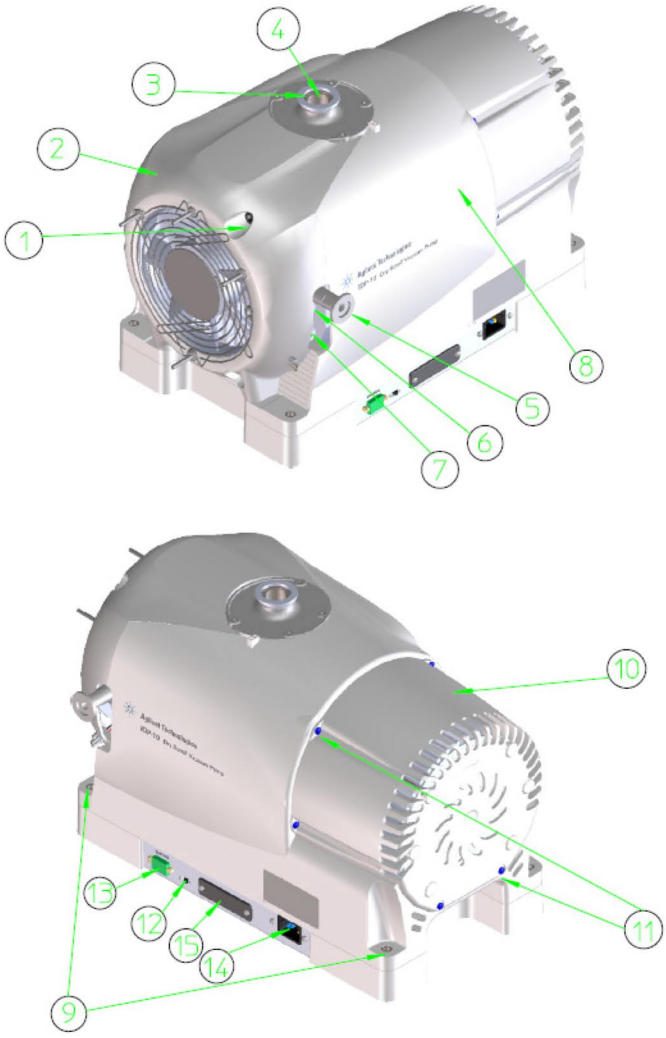

Figure 6 Outline Drawing and Principal Items

1. Front Cowling Screws; M8 (3)
2. Front Cowling
3. Inlet (NW25)
4. Inlet Screen
5. Exhaust Adapter NW16
6. Gas Ballast Port 1 (1/8" NPT). See “Gas Ballast” on page 19.
7. Gas Ballast Port 2 (1/8" NPT) See “Gas Ballast” on page 19.
8. Main Cowling
9. Mounting Holes: (4) through holes for 1/4" or M6 Hardware
10. Rear Cowling
11. KA40 Phillips PT hardware (6)
12. On/Off Switch
13. IO Control
14. Power Connection (IEC-320)
15. Hour Meter

To mount from the 1/4" through hole mounting holes suitable for 1/4" or M6 hardware, first remove rubber feet secured by M3 hardware.

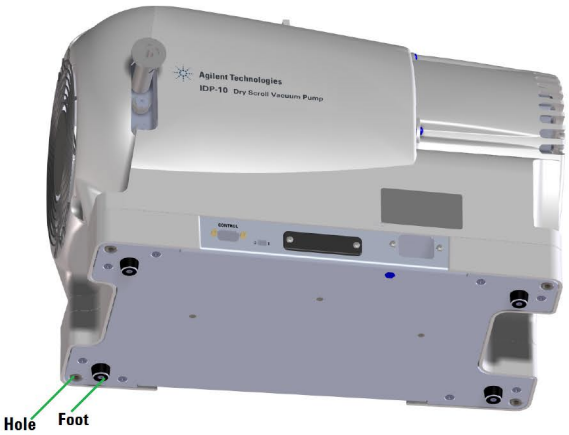

Figure 7 Feet Label

Unpacking and Inspection

1. Orient the shipping container with *This End Up* on top.
2. Open the box and carefully lift the IDP-10 out of the box.
3. Save the carton and all packing materials.
4. Inspect the pump for damage. If there is shipping damage, contact the freight carrier and your local Agilent sales office immediately.

WARNING

The pump is a heavy object. To avoid muscle strain or back injury, use lifting aides and proper lifting techniques when removing or replacing.

JEVI VACUUM INSTRUMENTS

WWW.JEVINSTRUMENTS.COM

Installation

Safety

Do not remove or modify any safety or insulating equipment from the pump. To do so may create a serious safety hazard and may void the warranty.

WARNING

- ❑ *This pump is capable of pumping and exhausting air and inert gases only. It is not designed to pump explosive, flammable, corrosive or particulate forming gases. They can cause bodily injury, explosion, or fire.*
- ❑ *Install in an area that is not exposed to rain, steam, or excessive humidity. They can cause electric shock, short circuits, and severe bodily injury.*
- ❑ *Before reconfiguring the pump voltage, or inspecting or servicing the pump, be sure the electrical supply is disconnected.*
- ❑ *The gas ballast must be sealed whenever pumping any gas not intended to be vented to the atmosphere.*
- ❑ *An exhaust silencer option is available for those applications in which it is desirable to diminish the sound level produced by the pump.*
- ❑ *To prevent bodily injury, avoid exposing any part of the human body to vacuum.*

CAUTION

Although the pump can pump trace particulates normally found in the atmosphere, it is not designed to process solids, chemicals, powders, solvents, condensates, or other particulates. They can damage the equipment, degrade its performance, or shorten its useful life.

Startup

1. Check that the inlet screen is installed before beginning operation.

WARNING

Do not insert a finger or any foreign object in the path of the fan; serious personal injury may result or the pump may be damaged.

2. Operate the pump at an ambient temperature of 5 °C to 40 °C (41 °F to 104 °F), otherwise damage to the pump or shortened operating life may result.

CAUTION

Do not block the fan ducts. Blocking these ducts can cause pump overheating. A pump surface temperature in excess of 65 °C (150 °F) is potentially damaging. If such conditions are observed, turn the pump off and allow it to cool. Disassemble, inspect for damage, and repair, if necessary.

JEVI VACUUM INSTRUMENTS

WWW.JEVINSTRUMENTS.COM

Electrical Connections

Power Cord

Several power cord options are available from your Agilent dealer. Descriptions of the available power cords and their ordering numbers are given in Table 6.

Table 6 IDP-10 Power Cord Selection

Country	Power Cord Specification	Order
Europe	10 A / 220-230 VAC, 2.5 m	656494220
Denmark	10 A / 220-230 VAC, 2.5 m	656494225
Switzerland	10 A / 230 VAC, 2.5 m	656494235
UK/Ireland	13 A / 230 VAC, 2.5 m	656494250
India	10 A / 220-250 VAC, 2.5 m	656494245
Israel	10 A / 230 VAC, 2.5 m	656494230
Japan	12 A / 100 VAC, 2.3 m	656494240
North America	15 A / 125 VAC, 2.0 m	656458203
	10 A / 230 VAC, 2.5 m	656494255

Grounding Instructions

This product should be grounded. In the event of an electrical short circuit, grounding reduces the risk of electric shock by providing an escape wire for the electric current. This pump is equipped with a power cord that has a grounding wire with an appropriate grounding plug. The plug must be inserted into an outlet that is properly installed and grounded in accordance with all local codes and ordinances.

DANGER

Improper installation of the grounding plug can result in a risk of electrical shock.

WARNING

Check with a qualified electrician or serviceman if the grounding instructions are not completely understood, or if you are in doubt as to whether the product is properly grounded.

Do not modify the plug provided; if it does not fit the outlet, have the proper outlet installed by a qualified electrician.

Connect the product only to an outlet that has the same configuration as the plug.

Do not use an adapter with this product.

WARNING

If the product must be reconnected for use on a different type of electric circuit, the connector should be replaced by qualified service personnel.

Extension Cords

If you must use an extension cord with this product:

- For this product, Agilent recommends using only extension cords with a minimum of 16-gage wire and a maximum length of 25 feet (7.6 m).
- Use only a 3-wire extension cord that will accept the plug.
- Make sure your extension cord is in good condition.
- Be sure the extension cord is rated high enough to carry the current your product will draw. An undersized cord will cause a drop in line voltage resulting in loss of power and overheating.

JEVI VACUUM INSTRUMENTS

WWW.JEVINSTRUMENTS.COM

Start Current

Table 7 lists the typical IDP-10 maximum starting current and duration.

Table 7 Typical IDP-10 Maximum Starting Current (A)

Frequency	High Voltage Range					
	100 V	120 V	127 V	200 V	230 V	240 V
60 Hz	49	50	50	25	N/A	38
50 Hz	50	N/A	N/A	49	32	35
57 Hz	N/A	N/A	50	N/A	N/A	N/A
63Hz	N/A	N/A	50	N/A	N/A	N/A

Mechanical Connections

Isolation Valve

The IDP-10 has an optional integral automatic isolation valve. If the IDP-10 is equipped with this valve, an internal timer opens the valve 30 seconds after the pump is switched ON. If power is lost or the pump is switched OFF, the isolation valve will immediately close.

Pump Inlet

Use NW25, or larger, clean vacuum hardware with as short a length as practical between the pump and vacuum chamber.

Insert a bellows between the pump and vacuum chamber to provide both vibration isolation and strain relief.

Pump Exhaust

A female 1/4" National Pipe Thread exhaust fitting is located radially near the front of the pump. Additionally, an NW16 male adapter with 1/4" National Pipe Thread is provided. To avoid overheating the pump, do not restrict the exhaust flow with long lengths of small diameter tubing. Use as short as practical lengths of NW16, or larger, diameter hardware.

Gas Ballast

When pumping gas loads containing water vapor or condensible gases, use the gas ballast. To activate gas ballast (may be removed using a 9/16 nut driver), remove the solid 1/4 NPT plug from either port 1 or port 2, and install the sintered filter plug provided with the pump (see Figure 6 on page 15).

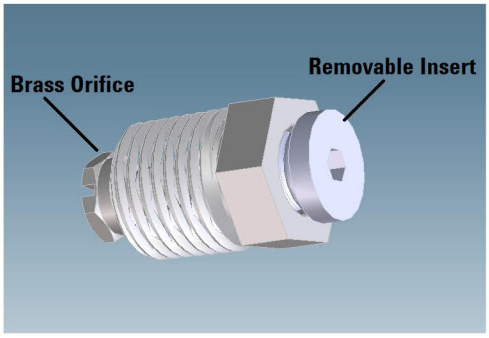

Figure 8 Gas Ballast

Figure 8 shows the Gas Ballast plug assembly in both ports 1 and 2.

CAUTION

If hazardous materials are pumped, do not use gas ballast.

Gas ballast port 1 is used for moderate water vapor loads, such as intermittently pumping out a volume exposed to normal ambient humidity. Gas ballast port 2 is used for high water vapor loads, such as repetitively pumping out a volume exposed to excessive ambient humidity, or process gas loads with a high water vapor content. With both gas ballast 1 and gas ballast 2 in use, up to 120 g/hr water vapor can be handled. If both gas ballast 1 and gas ballast 2 are open (plugs removed, allowing for air flow), the sintered filter plug should be installed in the gas ballast 2 location instead of the gas ballast 1 location.

For applications where ingress of air is undesirable, dry nitrogen at a flow rate of approximately 5 l/min can be provided to the gas ballast inlet by making a 1/4 NPT connection to the port. If either gas ballast is to be used for only short intervals, the removable insert may be taken out of the gas ballast without removing the entire plug. By removing this insert (may be removed using a 1/8" hex wrench), the gas ballast allows for air flow through the brass orifice. There is no need to remove the brass orifice (see Figure 8).

CAUTION

Pumping high water vapor loads can cause a temporary increase in ultimate pressure, due to adsorption and absorption of water vapor by the internal surfaces of the pump. Pumping water vapor loads in excess of the water vapor handling capability of the gas ballast can cause reduced time between tip seal replacements.

JEVI VACUUM INSTRUMENTS

WWW.JEVINSTRUMENTS.COM

JEVI VACUUM INSTRUMENTS
WWW.JEVINSTRUMENTS.COM

Operation

Cleaning the Pump

Unlike conventional oil-sealed pumps, Agilent dry scroll pumps do not contain fluid for the cleansing of accumulated dust and debris. Run the pump periodically at atmosphere for a minute or two to flush it out. Until experience is gained on your specific process, flush the pump regularly and adjust this schedule according to your specific conditions.

Startup Procedure

1. Make sure that the pump is configured for the mains voltage to which the pump is connected.

NOTE

The pump ON/OFF switch is a slide type switch that has symbols in accordance with IEC Publication 417 to represent the ON and OFF positions. Figure 9 shows a switch in the ON position.

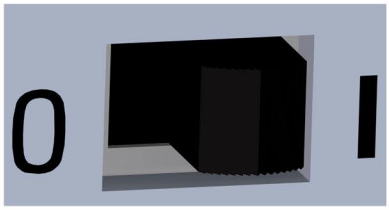

Figure 9 ON/OFF Power Switch

2. Switch the pump ON.
3. If the pump is equipped with an optional inlet valve, the valve will open automatically 30 seconds after starting the pump.

Shutdown Procedure

To shutdown the pump:

❑ Switch the pump OFF.

If the pump is equipped with an optional inlet valve, the isolation valve will close very quickly to isolate the vacuum chamber from the pump.

Troubleshooting

Use the Troubleshooting chart (Table 8) to assist in defining a problem, determining a possible cause, and defining action steps to remedy the situation.

Table 8 Troubleshooting Chart

Problem	Possible Causes	Corrective Actions
Will not start	Motor thermal protector open	Allow motor to cool. Identify cause of overload.
	Excessive voltage drop	Check size and length of cable.
	Defective motor	Inspect. Contact Agilent.
Poor ultimate pressure	System leak	Locate and repair leak.
	Water in pump	Flush pump with air or dry nitrogen.
	Gas ballast plugged	Replace breather vent. Contact Agilent.
	Solvent in pump	Flush pump with air or dry nitrogen. Install trap or filter.
	Worn tip seal	Replace tipseals.
	Poor conductance to pump	Replumb with shorter and/or larger diameter tubing.
Hammering noise	Pump overheated	Check ventilation to pump. Check ambient temperature.
	Debris in pump	Check intake screen. Flush pump. Disassemble pump and inspect.
Pump runs intermittently	Motor thermal protector is cycling open and closed.*	Allow the motor to cool. Identify the cause of the overload. Check for proper operation of fan. Ensure there is adequate space for air to circulate at inlets.
Motor speed interment slowing	Inverter limit to protect from high power draw due to high gas load at inlet	Identify cause of overload.
Pump does not pump for first 30 seconds.	Optional valve is closed for the first 30 seconds of operation.	None, this is normal.
Hour meter does not light.	Internal failure, no AC power.	Check branch circuit breaker plug AC power cord into unit and/or wall outlet. Contact Agilent.
Service, Maintenance, Tip Seal, or Part Replacement	Wear or damage	See Table 9 on page 22 and Table 10 on page 22.

* *The IDP-10 is equipped with an auto-reset thermal motor protector. This protector will automatically shut down the pump when it detects an overload condition, and will automatically restart the pump when the motor has cooled to within an acceptable temperature range.*

Maintenance

Kits and Service Options

Agilent pumps will provide many years of trouble-free service if the maintenance procedures and intervals are observed. Cleaning and tip seal replacement are recommended when pump base pressure has risen to an unacceptably high level for your application. If your pump exhibits humming or grinding noises from the bearings, a major overhaul should be done by Agilent or an authorized rebuild center. Advance exchange pumps are available to minimize downtime.

The parts needed for tip seal replacement on the IDP-10 are available in the kit described in Table 9. This kit contains seals and O-rings, and can be obtained from your Agilent dealer.

Table 9 Accessories and Replacement Kits

Part Number	Description	Contents
X3807-67002	Front Cowling Assembly	Replacement front cowling material to replace a broken plastic cowling.
X3807-67003	Rear Cowling Assembly	Replacement rear cowling material to replace a broken plastic cowling.
X3807-68008	Gas Ballast Kit	Spare Parts

NOTE

For further service options, please contact your local service center listed in the back of this manual and ask for your local representative.

JEVI VACUUM INSTRUMENTS

WWW.JEVINSTRUMENTS.COM

Service

Agilent offers rebuilding service at our repair centers, or you can obtain advance exchange of complete IDP-10 pumps. The service plans available and their ordering numbers are given in Table 10.

Table 10 Service Options

Factory Service Plans	Model Number
Replacement Tip Seal Set	X3807-67000
IDP-10 Exchange Pump	X3810-69000
IDP-10 Exchange with Inlet Valve	X3810-69010
IDP-10 Full Pump Rebuild	X3810-69000-RP
IDP-10 Full Pump (with Inlet Valve) Rebuild	X3810-69010-RP

Cleaning

Exterior

The exterior surfaces of the IDP-10 may be cleaned with a cloth slightly moistened with water. If necessary alcohol or a mild detergent may be used instead. Do not pour or spray any liquids onto the pump.

Interior

Run the pump periodically at atmosphere for a minute or two to flush it out. For more information, see "Cleaning the Pump" on page 20.

Tip Seal Replacement

The parts and tools required to replace tip seals include:

- ❑ Tip Seal Replacement Kit P/N X3807-67000
- ❑ 4 and 8 mm Allen wrenches
- ❑ Razor blade or side-cutting pliers
- ❑ Compressed air (optional)

WARNING

If dangerous gases were being pumped, flush the pump with air or inert gas for at least 10 minutes prior to disassembly.

Figure 10 on page 23 shows the various components involved in a tip seal replacement procedure. Refer to Figure 10 as you follow the procedure.

To remove the worn tip seals:

1. Disconnect the pump from electrical power.
2. Remove (3) M8 socket head bolts (item 1).

3. Using a crescent wrench, remove the exhaust adapter (item 2).
4. Remove the front cowling and hang out of the way (item 3).
5. Remove (4) M5 bolts (item 4).
6. Remove the scroll housing axially off the frame (item 5).
7. Remove and discard the worn tip seals (items 7 and 8) and the main O-ring (item 6).
8. If compressed air is available, blow any remaining seal debris off the scroll parts. If seal debris is attached to the sides, use a razor or Exacto knife to scrape the debris off.

JEVI VACUUM INSTRUMENTS

WWW.JEVINSTRUMENTS.COM

To install the new seals and O-rings:

1. Unpack the Tip Seal.
2. Install the closed loop portion of the Tip Seal onto the Orbiting Scroll (item 9).
3. Sequentially insert the seal from center to the outer edge of the scroll wall.
4. Cut the Tip Seal about 1/8" (3 mm) from the groove end.
5. Use the remaining Tip Seal material to fill the seal groove on the Scroll Housing and again trim the excess Tip Seal so that a gap of about 1/8" (3 mm) remains.
6. Place the new main O-ring onto the Frame (item 10). Make sure the area where the O-ring sits is clean.
7. Carefully replace the Scroll Housing making sure to line up the Locating Pins. Be sure that the Tip Seal has not fallen out of its groove.
8. Reinstall (4) M5 bolts (item 4). Torque the (4) M5 bolts to 4 N-m (40 in-lbs).
9. Place the front cowling in place and replace the M8 bolts.
10. Reinstall the exhaust adapter.
11. Reconnect the pump to the electrical power mains.

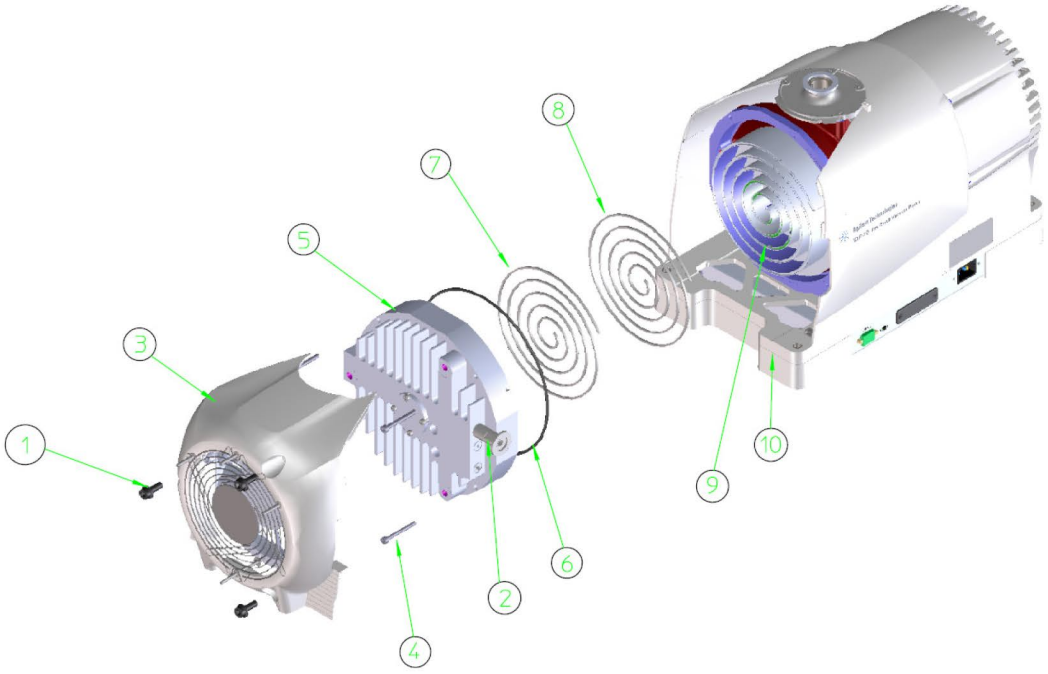

Figure 10 Exploded View of Pump Body

1. Front Cowling Bolts; M8 (3)
2. Exhaust Fitting (NW16)
3. Front Cowling Assembly
4. Frame Bolts; M5 (4)
5. Scroll Housing
6. Main O-ring; Parker 2-265 Viton
7. Tip Seal for Scroll Housing
8. Tip Seal for Orbiting Scroll
9. Orbiting Scroll
10. Frame

To test the pump:

1. Run the pump for about 5 seconds. Verify that the front fan is running.

   If you hear loud noises or observe labored operation, this indicates that the Tip Seal or main O-ring are possibly out of place.

2. Disassemble and repair as necessary.

   The pump is now ready to return to service.

NOTE

Newly installed Tip Seals may require several hours of run time to seat properly and enable the pump to meet speed and base pressure specifications.

Agilent Technologies

JEVI VACUUM INSTRUMENTS

Vacuum Products Division
Instructions for returning products

WWW.JEVINSTRUMENTS.COM

Dear Customer,

Please follow these instructions whenever one of our products needs to be returned.

Complete the attached **Request for Return form** and send it to Agilent Technologies (see below), taking particular care to include the completed **Health and Safety** declaration Section. No work can be started on your unit until we receive a completed copy of this form.
After evaluating the information, Agilent Technologies will provide you with a **Return Authorization (RA) number** via email or fax, as requested. Note: Depending on the type of return, a Purchase Order may be required at the time **the Request for Return is submitted**. We will quote any necessary services (evaluation, repair, special cleaning, eg).

Product preparation

- Remove all accessories from the core product (e.g. inlet screens, vent valves).
- Prior to shipment and if applicable for your product, drain any oils or other liquids, purge or flush all gasses, and wipe off any excess residue.
- If ordering an Advance Exchange product, please use the packaging from the Advance Exchange to return the defective product.
- Seal the product in a plastic bag, and package product carefully to avoid damage in transit. You are responsible for loss or damage in transit.
- Include a copy of the Health and Safety Declaration in the shipping documentation on the outside of the shipping box of your returning product.
- Clearly label package with RA number. Using the shipping label provided will ensure the proper address and RA number are on the package. Packages shipped to Agilent without a RA clearly written on the outside cannot be accepted and will be returned.
- Return only products for which the RA was issued.

Shipping

- Ship to the location specified on the printable label, which will be sent, along with the RA number, as soon as we have received all of the required information. Customer is responsible for freight charges on returning product.
- Return shipments must comply with all applicable Shipping Regulations (IATA, DOT, ADR, etc.) and carrier requirements.

RETURN THE COMPLETED **REQUEST FOR RETURN** FORM TO YOUR NEAREST LOCATION:

EUROPE:
Fax: 00 39 011 9979 330
Fax Free: 00 800 345 345 00
Toll Free: 00 800 234 234 00
vpt-customercare@agilent.com

NORTH AMERICA:
Fax: 1 781 860 9252
Toll Free: 800 882 7426
vpl-ra@agilent.com

PACIFIC RIM:
please visit our website for individual office information
http://www.agilent.com

Agilent Technologies

Vacuum Products Division
Terms and conditions

TERMS AND CONDITIONS

Please read the terms and conditions below as they apply to all returns and are in addition to the Agilent Technologies Vacuum Product Division – Products and Services Terms of Sale.

- Unless otherwise pre-negotiated, customer is responsible for the freight charges for the returning product. Return shipments must comply with all applicable Shipping Regulations (IATA, DOT, etc.) and carrier requirements.
- Agilent Technologies is not responsible for returning customer provided packaging or containers.
- Customers receiving an Advance Exchange product agree to return the defective, rebuildable part to Agilent Technologies within 15 business days. Failure to do so, or returning a non-rebuildable part (crashed), will result in an invoice for the non-returned/non-rebuildable part.
- Returns for credit toward the purchase of new or refurbished Products are subject to prior Agilent approval and may incur a restocking fee. Please reference the original purchase order number.
- Units returned for evaluation will be evaluated, and a quote for repair will be issued. If you choose to have the unit repaired, the cost of the evaluation will be deducted from the final repair pricing. A Purchase Order for the final repair price should be issued within 3 weeks of quotation date. Units without a Purchase Order for repair will be returned to the customer, and the evaluation fee will be invoiced.
- Products returned that have not been drained from oil will be disposed.
- A Special Cleaning fee will apply to all exposed products
- If requesting a calibration service, units must be functionally capable of being calibrated.

JEVI VACUUM INSTRUMENTS

WWW.JEVINSTRUMENTS.COM

Agilent Technologies

JEVI VACUUM INSTRUMENTS

WWW.JEVINSTRUMENTS.COM

Vacuum Products Division
Request for Return Form

Customer information		
Company :	Contact Name:	
Address:	Tel:	Fax:
	Email:	

Equipment			
Product description	Agilent PartNo	Agilent Serial No	Original Purchasing Reference
Failure description		Type of process (for which the equipment was used)	

Type of return

☐ Non Billable ☐ Billable ➡ New PO # (hard copy must be submitted with this form): _____

☐ Exchange ☐ Repair ☐ Upgrade ☐ Consignment/Demo ☐ Calibration ☐ Evaluation ☐ Return for Credit

Health and safety

The product has been exposed to the following substances:
(by selecting 'YES' you MUST complete the table to the right)

Substances (please refer to MSDS forms)

* Agilent will not accept delivery of any product that is exposed to radioactive, biological, explosive substances or dioxins, PCB's without written evidence of decontamination.

		Trade name	Chemical name	Chemical Symbol	CAS Number
Toxic	☐ YES ☐ NO				
Harmful	☐ YES ☐ NO				
Corrosive	☐ YES ☐ NO				
Reactive	☐ YES ☐ NO				
Flammable	☐ YES ☐ NO				
Explosive (*)	☐ YES ☐ NO				
Radioactive (*)	☐ YES ☐ NO				
Biological (*)	☐ YES ☐ NO				
Oxidizing	☐ YES ☐ NO				
Sensitizer	☐ YES ☐ NO				
Other dangerous substances	☐ YES ☐ NO				

Goods preparation

If you have replied YES to one of the above questions. Has the product been purged? ☐ YES ☐ NO
If yes, which cleaning agent/method:

Has the product been drained from oil? ☐ YES ☐ NOT APPLICABLE
I confirm to place this declaration on the outside of the shipping box. ☐

I declare that the above information is true and complete to the best of my knowledge and belief.
I understand and agree to the terms and conditions on page 2 of this document.

Name:	Authorized Signature:
Position:	
Date:	

NOTE: If a product is received at Agilent which is contaminated with a toxic or hazardous material that was not disclosed, **the customer will be held responsible** for all costs incurred to ensure the safe handling of the product, and is liable for any harm or injury to Agilent employees as well as to any third party occurring as a result of exposure to toxic or hazardous materials present in the product.

This page intentionally left blank.

This page intentionally left blank.

Agilent Vacuum Products Division/Sales and Service Offices

United States
Agilent Technologies
121 Hartwell Avenue
Lexington, MA 02421 - USA
Ph. +1 781 861 7200
Fax: +1 781 860 5437
Toll-Free: +1 800 882 7426
vpl-customercare@agilent.com

Netherlands
Agilent Technologies Netherlands B.V.
Customer Contact Center
Laan van Langerhuize 1, toren A-8
1186 DS Amstelveen
Tel. +31 020 547 2600
Fax +31 020 654 5748
customercare_netherlands@agilent.com

Belgium
Agilent Technologies Belgium S.A./N.V.
Customer Contact Center
Pegasus Park
De Kleetlaan 12A bus 12
B-1831 Diegem
Tel. +32 2 404 92 22
Fax +32 2 626 46 30
customercare_belgium@agilent.com

Brazil
Agilent Technologies Brasil
Avenida Marcos Penteado de Ulhoa
Rodrigues, 939 - 6° andar
Castelo Branco Office Park
Torre Jacarandá - Tamboré
Barueri, Sao Paulo CEP: 06460-040
Toll free: 0800 728 1405

China
Agilent Technologies (China) Co. Ltd
No.3, Wang Jing Bei Lu, Chao Yang District
Beijing, 100102, China
Tel: +86 (0)10 64397888
Fax: +86 (0)10 64392765
Toll free: 800 820 6778 (ph); 400 820 6778 (cell.ph.)
vacuum.cnmarketing@agilent.com
vpc-customerservice@agilent.com

France
Agilent Technologies
Parc Technopolis - Z.A. de Courtaboeuf
3, avenue du Canada - CS 90263
91978 Les Ulis cedex, France
Tel: +33 (0) 1 64 53 61 15
Fax: +33 (0) 1 64 53 50 01
vpf.sales@agilent.com

Southeast Asia
Agilent Technologies Sales Sdn Bhd
Unit 201, Level 2 uptown 2,
2 Jalan SS21/37, Damansara Uptown
47400 Petaling Jaya, Selangor, Malaysia
Ph. +603 7712 6181
Fax: +603 7727 1239
Toll free: 1 800 880 805
vps-customerservice@agilent.com

India (Sales)
Agilent Technologies India Pvt. Ltd.
Unit Nos 110- 116, & Part of 101 & 109
First Floor, Splendor Forum,
Plot No.-3 , District Centre, Jasola
New Delhi-110025
Ph. +91 11 4623 7100
Fax: +91 4623 7105
Toll Free: 1 800 180 1517

Italy
Agilent Technologies Italia S.p.A.
Via F.lli Varian, 54
10040 Leini, (Torino) - Italy
Tel: +39 011 9979 111
Fax: +39 011 9979 350
Toll free: 00 800 234 234 00
vpt-customerservice@agilent.com

Japan
Agilent Technologies Japan, Ltd.
9-1 Takakura-cho Hachioji-city,
Tokyo, Japan
Tel.: +81- 3-5232-1253
Fax: +81-120-565-154
Toll-Free: +81-120-477-111
jp-vvt-sales.pdl-ext@agilent.com

Singapore
Agilent Technologies Singapore Pte. Ltd,
1 Yishun Avenue 7,
Singapore 768923
Tel : (65) 6215 8045
Fax : (65) 6754 0574
Toll free: 1 800 2762622
vps-customerservice@agilent.com

Korea
Agilent Technologies Korea, Ltd.
Ilshin Builiding 4F
Yongsan-gu Hannam-daero
Seoul Korea 04418
Tel: +82 (0)2 2194 9449
Fax: +82 (0)2 2194 9853
Toll free: 080 222 2452
vpk-customerservice@agilent.com

UK and Ireland
Agilent Technologies LDA UK Limited
Lakeside Cheadle Royal Business Park
Cheadle, Cheshire SK8 3GR,
United Kingdom
Ph. +44 01865291570
Fax +44 01865291571
Toll free: 00 800 234 234 00
Toll free fax: 00 800 345 345 00
vpt-customercare@agilent.com

© Agilent Technologies, Inc. 2016

India (Service)
Agilent Technologies India Pvt. Ltd.
C-Block, RMZ Centennial Plot Number- 8A, 8B, 8C, 8D,
Doddanakundi Industrial Area, ITPL Road,
Mahadevapura Post, Bangalore- 560048
Ph. +91 80 40614000
Fax: +91 80 40148991

Taiwan
Agilent Technologies Taiwan Limited
No. 20 Gao-shuang Road, Ping-zhen Dist
Tao-Yuan City
32450 Taiwan, R.O.C.
Tel: +886 3 4959004
Toll free: 0800 018 768
vpw-customerservice@agilent.com

Germany and Austria
Agilent Technologies
Sales & Services GmbH & Co. KG
Lyoner Str. 20
60 528 Frankfurt am Main
GERMANY
Tel: +49 69 6773 43 2230
Fax: +49 69 6773 43 2250

Mexico
Agilent Technologies
Concepcion Beistegui No 109
Col Del Valle
C.P. 03100 – Mexico, D.F.
Tel.: +52 5 523 9465
Fax: +52 5 523 9472

Other Countries
Agilent Technologies Italia S.p.A.
Via F.lli Varian, 54
10040 Leini, (Torino) - Italy
Tel.: +39 011 997 9111
Fax: +39 011 997 9350
Toll-Free: 00 800 234 234 00
vpt-customercare@agilent.com

Customer Support & Service
NORTH AMERICA:
Toll Free: 800 882 7426
vpl-ra@agilent.com
Lexington-service@agilent.com

EUROPE:
Toll Free: 00 800 234 234 00
vpt-customercare@agilent.com

PACIFIC RIM:
please visit our website for individual office information
http://www.agilent.com/chem/vacuum

Worldwide Web Site, Catalog and Order On-line:
www.agilent.com/chem/vacuum
Representatives in most countries

JEVI VACUUM INSTRUMENTS

Agilent Technologies

WWW.JEVINSTRUMENTS.COM