Agilent Technologies

Vacuum Products Division

CE

Capacitance Diaphragm Gauge

CDG-500

Operating Instructions

Manual No. TQNa76e1
Revision 5
May 2012

Capacitance Diaphragm Gauge

CDG-500

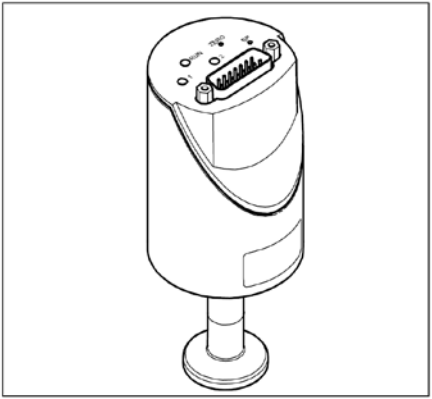

Declaration of Conformity
Konformitätserklärung
Déclaration de Conformité
Declaración de Conformidad
Verklaring de Overeenstemming
Dichiarazione di Conformità
一致性声明
適合宣言
적합성 선언

Agilent Technologies

CE

We
Wir
Nous
Nosotros
Wij
Noi
我们
私たち
우리는

Agilent Technologies
121 Hartwell Ave.
Lexington, MA 02421-3133 USA

declare under our sole responsibility that the product,
erklären, in alleiniger Verantwortung, daß dieses Produkt,
déclarons sous notre seule responsabilité que le produit,
declaramos, bajo nuestra sola responsabilidad, que el producto,
verklaren onder onze verantwoordelijkheid, dat het product,
dichiariamo sotto nostra unica responsabilità, che il prodotto,
基于独立承担责任的原则，特声明
は、当社単独の責任の下、この宣言が該当する製品
당사의 책임하에

Capacitance Diaphragm Gauge CDG-500

to which this declaration relates is in conformity with the following standard(s) or other normative documents.
auf das sich diese Erklärung bezieht, mit der/den flogenden Norm(en) oder Richtlinie(n) übereinstimmt.
auquel se réfère cette déclaration est conforme à la (auz) norme(s) ou au(x) document(s) normatif(s).
al que se refiere esta declaración es conforme a la(s) norma(s) u otro(s) documento(s) normativo(s).
waamaar deze verklaring verwijst, aan de volende norm(en) of richtlijn(en) beantwoodt.
a cui se riferisce questa dichiarazione è conforme alla/e sequente/l norma/o documento/l normativo/i.
符合以下标准或其它标准文档要求。
が、以下の規格またはその他の基準書類に適合することを宣言します。
이 선언과 관련한 제품이 다음의 표준과 기타 표준 문서를 준수한다는 것을 선언합니다.

- EN 61000 6 2:2005 (EMC: generic Immunity standard)
- EN 61000 6 3:2007 (EMC: generic emission standard)
- EN 61010 1:2001 (Safety requirements for electrical equipment for measurement, control and laboratory use)
- EN 61326:1997 + A1:1998 + A2:2001 +A3:2003 (EMC require-ments for electrical equipment for measurement, control and laboratory use)

John Ehmann
Operations Manger
Agilent, Inc.
Vacuum products Division
Lexington, MA USA

John Ehmann

Contents

For cross-references within this document, the symbol (→ 🗎 XY) is used, for cross-references to further documents, listed under "Further Information", the symbol (→ 🕮 [Z]).

Product Identification

In all communications with Agilent, please specify the information given on the product nameplate. For convenient reference copy that information into the space provided below.

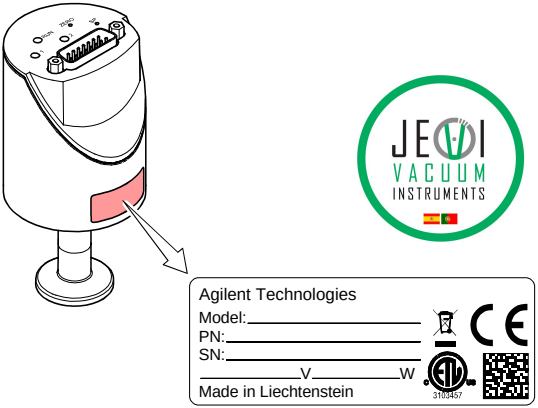

Validity

This document applies to products with the following part numbers:

Gauges without switching functions

		Measurement range, Full Scale (F.S.)		
Part number	**Flange**	**Torr**	**Pascal**	**mbar**
CDG500T1000KF16	DN 16 ISO-KF	10^{-1} … 1000 (F.S.)	1.33×10^{1} … 133'322 (F.S.)	1.33×10^{-1} … 1333 (F.S.)
CDG500T1000VCR8	8 VCR®			
CDG500T0100KF16	DN 16 ISO-KF	10^{-2} … 100 (F.S.)	1.33×10^{0} … 13'332.2 (F.S.)	1.33×10^{-2} … 133 (F.S.)
CDG500T0100VCR8	8 VCR®			
CDG500T0010KF16	DN 16 ISO-KF	10^{-3} … 10 (F.S.)	1.33×10^{-1} … 1'333.22 (F.S.)	1.33×10^{-3} … 13.3 (F.S.)
CDG500T0010VCR8	8 VCR®			
CDG500T0001KF16	DN 16 ISO-KF	10^{-4} … 1 (F.S.)	1.33×10^{-2} … 133.322 (F.S.)	1.33×10^{-4} … 1.3 (F.S.)
CDG500T0001VCR8	8 VCR®			

Gauges with two switching functions

Part number	Flange	Measurement range, Full Scale (F.S.) Torr	Pascal	mbar
CDG500T1000KF16S	DN 16 ISO-KF	10^{-1} … 1000 (F.S.)	1.33×10^{1} … 133'322 (F.S.)	1.33×10^{-1} … 1333 (F.S.)
CDG500T1000VCR8S	8 VCR®			
CDG500T0100KF16S	DN 16 ISO-KF	10^{-2} … 100 (F.S.)	1.33×10^{0} … 13'332.2 (F.S.)	1.33×10^{-2} … 133 (F.S.)
CDG500T0100VCR8S	8 VCR®			
CDG500T0010KF16S	DN 16 ISO-KF	10^{-3} … 10 (F.S.)	1.33×10^{-1} … 1'333.22 (F.S.)	1.33×10^{-3} … 13.3 (F.S.)
CDG500T0010VCR8S	8 VCR®			
CDG500T0001KF16S	DN 16 ISO-KF	10^{-4} … 1 (F.S.)	1.33×10^{-2} … 133.322 (F.S.)	1.33×10^{-4} … 1.3 (F.S.)
CDG500T0001VCR8S	8 VCR®			

The part number (PN) can be taken from the product nameplate.

If not indicated otherwise in the legends, the illustrations in this document correspond to CDG-500 gauges with the DN 16 ISO-KF vacuum connection. They apply to the gauges with other vacuum connection by analogy.

We reserve the right to make technical changes without prior notice.

All dimensions in mm.

Intended Use

The Capacitance Diaphragm Gauge CDG-500 is intended for absolute pressure measurement of gases in its respective pressure range (→ 🗎 7).

The gauge can be operated in connection with an Agilent AGC-100 Vacuum Gauge Controller, an Agilent Turbo AG Rack Controller, or with another appropriate measuring unit.

Function

The Capacitance Diaphragm Gauge consists of a capacitive sensor element made of aluminum oxide ceramics and electronics which convert the capacitance into a DC voltage output signal.

The output signal is linear to the measured pressure and independent of the gas type.

Trademark

VCR® Swagelok Marketing Co.

Patents

EP 1070239 B1, 1040333 B1

US Patents 6528008, 6591687, 7107855, 7140085

Scope of Delivery

1× gauge
1× pin for adjusting settings via buttons
1× Calibration Test Report
1× Operating Manual

Contents

For cross-references within this document, the symbol (→ 🗎 XY) is used, for cross-references to further documents, listed under "Further Information", the symbol (→ 🕮 [Z]).

1 Safety

1.1 Symbols Used

DANGER

Information on preventing any kind of physical injury.

WARNING

Information on preventing extensive equipment and environmental damage.

Caution

Information on correct handling or use. Disregard can lead to malfunctions or minor equipment damage.

Notice

1.2 Personnel Qualifications

Skilled personnel

All work described in this document may only be carried out by persons who have suitable technical training and the necessary experience or who have been instructed by the end-user of the product.

1.3 General Safety Instructions

- Adhere to the applicable regulations and take the necessary precautions for the process media used.

  Consider possible reactions with the product materials.
- Adhere to the applicable regulations and take the necessary precautions for all work you are going to do and consider the safety instructions in this document.
- Before beginning to work, find out whether any vacuum components are contaminated. Adhere to the relevant regulations and take the necessary precautions when handling contaminated parts.

Communicate the safety instructions to all other users.

1.4 Liability and Warranty

Agilent assumes no liability and the warranty becomes null and void if the end-user or third parties

- disregard the information in this document
- use the product in a non-conforming manner
- make any kind of interventions (modifications, alterations etc.) on the product
- use the product with accessories not listed in the product documentation.

The end-user assumes the responsibility in conjunction with the process media used.

Gauge failures due to contamination or wear and tear are not covered by the warranty.

2 Technical Data

Measurement range	→ "Validity"
Accuracy [1]	0.20% of reading
Temperature effect on zero	
≥10 Torr/mbar (F.S.)	0.0050% F.S./ °C
1 Torr/mbar (F.S.)	0.015% F.S./ °C
Temperature effect on span	0.01% of reading / °C
Resolution	0.003% F.S.
Gas type dependence	none
Output signal analog (measuring signal)	
Voltage range	–5 … +10.24 V
Measuring range	0 … +10 V
Relationship voltage-pressure	linear
Output impedance	0 Ω (short-circuit proof)
Loaded impedance	>10 kΩ
Response time	30 ms
Gauge identification	Resistance 13.2 kΩ referenced to supply common (voltage at pin 10 ≤5 V)

[1] Non-linearity, hysteresis, repeatability in the calibrated range at 25 °C ambient operating temperature without temperature effects after operation of 2 h.

Switching functions	SP1, SP2
Setting range	0 … +10 V
Hysteresis	1% F.S.
Relay contact	30 VDC / ≤0.5 ADC floating (n.o.)
closed	at low pressure (LED is lit)
open	at high pressure (LED is dark)
Switching time	≤50 ms

RS232C interface	
Transmission rate	9600 baud
Data format	binary 8 data bits one stop bit no parity bit no handshake
Connection	→ "Electrical Connection"

Further information about the RS232C interface → 🕮 [2].

Supply

DANGER

The gauge may only be connected to power supplies, instruments or control devices that conform to the requirements of a grounded protective extra-low voltage (SELV) and limited power source (LPS), Class 2. The connection to the gauge has to be fused [2].

Supply voltage	
at the gauge	+14 … +30 VDC Class 2 / LPS
ripple	≤1 V_{pp}

[2] Agilent controllers fulfill this requirement.

Current consumption	<500 mA (max. starting current)
Power consumption (depending on supply voltage)	≤1 W
Fuse required [2)]	1 AT (slow), automatic reset (Polyfuse)

The gauge is protected against reverse polarity of the supply voltage.

Electrical connection	15-pin D-Sub, male
Sensor cable	
without switching functions	5-pin plus shielding
with switching functions	9-pin plus shielding
Cable length	≤100 m (0.14 mm² conductor)

For longer cables, larger conductor cross-sections are required (R_{cable} ≤1.0 Ω).

Grounding concept	
Vacuum flange - signal common	→ "Power Connection"
Supply common - signal common	conducted separately; for differential measurement (10 Ω)

Materials exposed to vacuum	
Flange, tube	stainless steel AISI 316L
Sensor and diaphragm	ceramics (Al_2O_3 ≥99.5%)
Sensor–diaphragm connection	glass ceramics solder
Ceramics–metal connection	AgTiCu hard solder, Vacon 70 (28% Ni, 23% Co, 49% Fe)
Internal volume	≤3.6 cm^3
Admissible pressure (absolute)	
1000 Torr/mbar (F.S.)	3 bar
1 … 100 Torr/mbar (F.S.)	2 bar
Bursting pressure (absolute)	5 bar

Admissible temperatures	
Storage	–40 °C … +65 °C
Operation	+5 °C … +50 °C
Bakeout (not in operation)	≤110 °C at the flange
Relative humidity	≤80% at temperatures ≤+31 °C decreasing to 50% at +40°C
Use	indoors only, altitude up to 2000 m NN
Degree of protection	IP 30

Dimensions [mm]

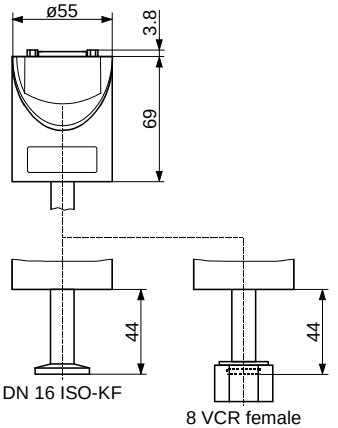

Weight	≤370 g

Analog Measuring Signal vs. Pressure

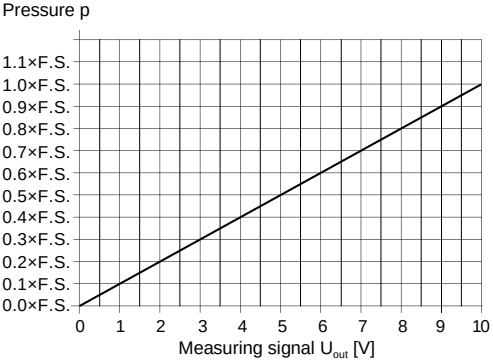

$$p = (U_{out} / 10\ V) \times p\ (F.S.)$$

Conversion Torr ↔ Pascal

	Torr	mbar [3]	Pa [3]
c	1.00	1013.25 / 760 = 1.3332…	101325 / 760 = 133.3224…

Example: Gauge with 10 Torr F.S.
Measuring signal U_{out} = 6 V

$$p = (6\ V / 10\ V) \times 10\ Torr$$
$$= 0.6 \times 10\ Torr = \mathbf{6\ Torr}$$

[3] Source: NPL (National Physical Laboratory)
Guide to the Measurement of Pressure and Vacuum,
ISBN 0904457x / 1998

3 Installation

WARNING

WARNING: fragile components

The ceramic sensor may be damaged by impacts.

Do not drop the product and prevent shocks and impacts.

3.1 Vacuum Connection

DANGER

DANGER: overpressure in the vacuum system >1 bar

Injury caused by released parts and harm caused by escaping process gases can result if clamps are opened while the vacuum system is pressurized.

Do not open any clamps while the vacuum system is pressurized. Use the type clamps which are suited to overpressure.

DANGER

DANGER: overpressure in the vacuum system >2.5 bar

KF flange connections with elastomer seals (e.g. O-rings) cannot withstand such pressures. Process media can thus leak and possibly damage your health.

Use O-rings provided with an outer centering ring.

DANGER

DANGER: protective ground

Products that are not correctly connected to ground can be extremely hazardous in the event of a fault.

Electrically connect the gauge to the grounded vacuum chamber. This connection must conform to the requirements of a protective connection according to EN 61010:

- VCR flanges fulfill this requirement.
- For gauges with a KF flange, use a conductive metallic clamping ring.

Caution

Caution: vacuum component

Dirt and damages impair the function of the vacuum component.

When handling vacuum components, take appropriate measures to ensure cleanliness and prevent damages.

Caution

Caution: dirt sensitive area

Touching the product or parts thereof with bare hands increases the desorption rate.

Always wear clean, lint-free gloves and use clean tools when working in this area.

Mount the gauge so that no vibrations occur. The gauge may be mounted in any orientation. To keep condensates and particles from getting into the measuring chamber preferably choose a horizontal to upright position and possibly use a seal with a centering ring and filter. If adjustment should be possible after the gauge has been installed, be sure to install it so that the buttons can be accessed with a pin (→ 24).

Remove the protective lid and connect the product to the vacuum system.

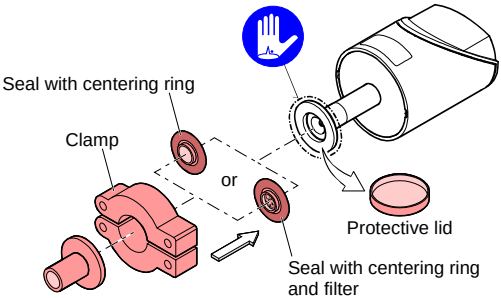

Keep the protective lid.

3.2 Power Connection

Make sure the vacuum connection is properly made (→ 🗎 18).

DANGER

The gauge may only be connected to power supplies, instruments or control devices that conform to the requirements of a grounded protective extra-low voltage (SELV) and limited power source (LPS), Class 2. The connection to the gauge has to be fused [4].

Ground loops, differences of potential, or EMC problems may affect the measurement signal. For optimum signal quality, please do observe the following notes:

- Connect the cable shield to ground on one side via the chassis ground. Do not connect the other side of the shield.
- Connect the supply common with protective ground directly at the power supply.
- Use differential measurement input (signal common and supply common conducted separately).
- Potential difference between supply common and housing ≤18 V (overvoltage protection).

[4] VARIAN controllers fulfill this requirement.

❶ If no sensor cable is available, make one according to the following diagram.

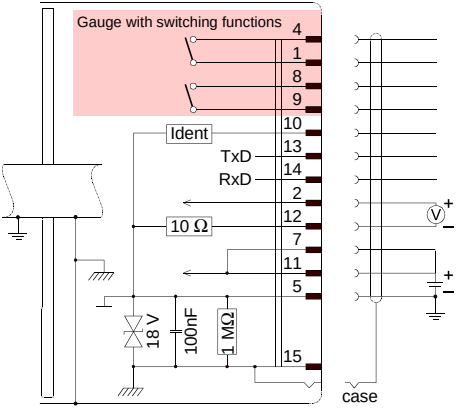

Electrical connection

Pin 1, 4	Relay SP1, closing contact
Pin 2	Signal Output or thresholds SP1/2
Pin 5	Supply common, GND
Pin 7, 11	Supply
Pin 8, 9	Relay SP2, closing contact
Pin 10	Gauge identification
Pin 12	Signal common
Pin 13	RS232, TxD
Pin 14	RS232, RxD
Pin 15	Housing (Chassis Ground)
case	Connector case

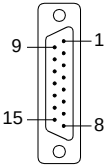

D-Sub,15-pin
female
soldering
side

❷ Connect the sensor cable to the gauge and secure it using the lock screws.

❸ Connect the sensor cable to the controller.

4 Operation

Put the gauge into operation. If you are using an Agilent controller, define the measurement range (→ 🕮 [1]).

A warm-up time of at least ¼ hour should be allowed; for exact pressure measurements a warm-up time of at least 2 hours is required.

4.1 Displays

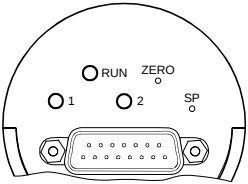

LED	State	Meaning
<RUN>	lit	Measurement mode
	flashing	Other mode, error, out of measurement range
<1> *)	lit	p ≤ setpoint level 1
	flashing	Adjusting setpoint <1>
<2> *)	lit	p ≤ setpoint level 2
	flashing	Adjusting setpoint <2>

*) Gauges with switching functions only.

4.2 Zeroing the Gauge

The gauge is factory calibrated while "standing upright" (→ "Calibration Test Report").

☞ We recommend performing a zero adjustment, when the gauge is operated for the first time.

Due to long time operation or contamination, a zero drift could occur and zero adjustment may become necessary.

For adjusting the zero, operate the gauge under the same constant ambient conditions and in the same mounting orientation as normally.

The output signal (measuring signal) is depending on the mounting orientation. The signal difference between the vertical and horizontal mounting orientation is:

F.S.	ΔU / 90°
1000 Torr/mbar	≈2 mV
100 Torr/mbar	≈10 mV
10 Torr/mbar	≈50 mV
1 Torr/mbar	≈300 mV

☞ If the gauge is operated via a controller, the zero of the whole measuring system has to be adjusted on the controller: first, adjust the zero of the gauge and then, the zero of the controller.

4.2.1 <ZERO> Adjustment

❶ Evacuate the gauge to a pressure according to the table below:

F.S.	Recommended final pressure for zero adjustment		
1000 Torr/mbar	$<5\times10^{-2}$ Torr	$<6.65\times10^{0}$ Pa	$<5\times10^{-2}$ mbar
100 Torr/mbar	$<5\times10^{-3}$ Torr	$<6.65\times10^{-1}$ Pa	$<5\times10^{-3}$ mbar
10 Torr/mbar	$<5\times10^{-4}$ Torr	$<6.65\times10^{-2}$ Pa	$<5\times10^{-4}$ mbar
1 Torr/mbar	$<5\times10^{-5}$ Torr	$<6.65\times10^{-3}$ Pa	$<5\times10^{-5}$ mbar

If the final pressure in the gauge is too high for zero adjustment (>25% of the F.S.), the zero cannot be reached and the <RUN> LED flashes. If this is the case, activate the factory setting and adjust the zero again (→ 🗎 31).

❷ Operate the gauge for at least ¼ hour (until the signal is stable).

❸ Briefly press the <ZERO> button with a pin (max. ø1.1 mm). The zero adjustment runs automatically. The <RUN> LED flashes until the adjustment (duration ≤8 s) is completed.

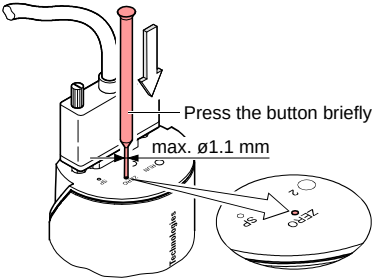

☞ After zero adjustment the gauge automatically returns to measurement mode. The <RUN> LED lits.

☞ The zero can also be adjusted via the RS232C interface (→ 🕮 [2]).

The <RUN> LED flashes if

- the signal output is negative (< -20 mV) when the final pressure has been attained
- the zero adjustment has failed.

4.2.2 <ZERO> Adjustment with Ramp Function

The ramp function allows to adjust the zero at a known reference pressure within the measurement range of the gauge.

It also permits to adjust an offset of the characteristic curve in order to

- compensate for the offset of the measuring system or
- obtain a slightly positive zero for a 0 … 10 V AD converter.

The offset should not exceed 2% of the F.S. (+200 mV). At a higher positive offset, the upper limit of the measurement range is exceeded.

☞ Recommended procedure for adjusting the offset of a measuring system: → Notice 🗎 24.

❶ Operate the gauge for at least ¼ hour (until the signal is stable).

❷ Push the <ZERO> button with a pin (max. ø1.1 mm) and keep it depressed. The <RUN> LED starts flashing. After 5 s, the zero adjustment value, starting at the current output value, keeps continually changing (ramp) until the button is released or until the setting limit (max. 25% F.S.) is reached. The corresponding output signal is delayed by about 1 s.

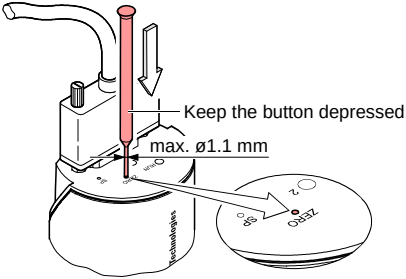

❸ Push the <ZERO> button again:

Fine adjustment within 0...3 s:	the zero adjustment value changes by one unit (push <ZERO> button in intervals of 1 s)
Change of direction within 3...5 s:	the zero adjustment changes its direction (the flashing frequency of the <RUN> LED changes briefly)

☞ If the <ZERO> button is released for more than 5 s, the gauge returns to the measurement mode.

☞ The zero with Base-Pressure-Offset can also be adjusted via the RS232C interface (→ 🕮 [2]).

The <RUN> LED flashes if the signal output is negative.

4.3 Switching Functions

The two switching functions can be adjusted to any pressure within the whole measurement range (→ 🗎 17).

The current setpoint setting

- is output at the D-Sub connector instead of the measurement signal (→ 🗎 22) and can be measured with a voltmeter after the <SP> button is pressed, or
- can be read/written via the RS232C interface.

If the pressure is lower than the setpoint, the corresponding LED is lit (<1> or <2>) and the corresponding relay (→ 🗎 22) is energized.

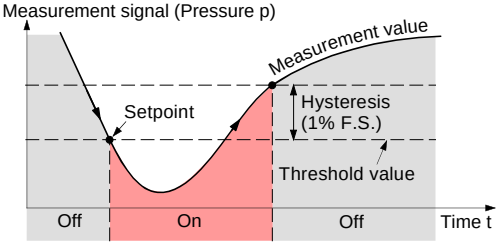

4.3.1 Adjusting the Setpoints

The setpoints can be adjusted via

- the buttons on the gauge,
- the RS232C interface (→ 🕮 [2]).

DANGER

DANGER: malfunction

If processes are controlled via the signal output, keep in mind that by pushing the <SP> button the measurement signal is suppressed and the corresponding threshold value is output instead. This can cause malfunctions.

Push the <SP> button only if you are sure that no damages can arise from a malfunction.

Adjusting Setpoint <1>

❶ Push the <SP> button with a pin (max. ø1.1 mm). The gauge changes to the switching function mode and outputs the current lower threshold value at the measurement value output for about 10 s (LED <1> flashes).

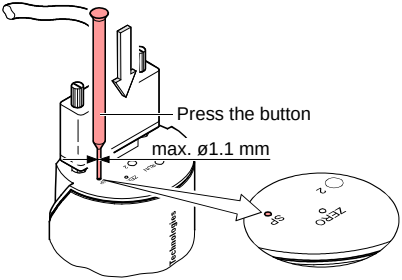

❷ For changing the threshold value, push the <ZERO> button and keep it depressed. The threshold keeps changing from the current value (ramp) until the button is released or until the limit of the setting range is reached.

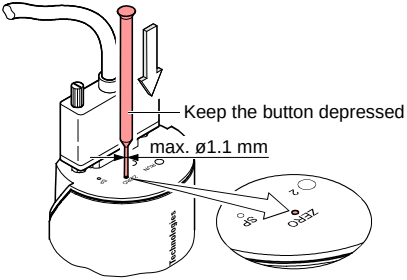

❸ Push the <ZERO> button again:

Fine adjustment within 0...3 s:	the zero adjustment value changes by one unit
Change of direction within 3...5 s:	the zero adjustment changes its direction (the flashing frequency of the <RUN> LED changes briefly)

☞ If the <ZERO> button is released for more than 5 s, the gauge returns the measurement mode.

☞ The upper threshold is automatically set 1% F.S. above the lower one (hysteresis).

Adjusting Setpoint <2>

Push the <SP> button twice (LED <2> flashes). The adjustment procedure is the same as for setpoint <1>.

4.4 Activating the Factory Setting (Factory Reset)

All user defined parameters (e.g. zero, filter) are restored to their default values.

⚠ Loading of the default parameters is irreversible.

Loading the default parameters:

❶ Put the gauge out of operation.

❷ Keep the <ZERO> button depressed for at least 5 s while the gauge is being put into operation (Power ON).

5 Deinstallation

WARNING

WARNING: fragile components

The ceramic sensor may be damaged by impacts.

Do not drop the product and prevent shocks and impacts.

DANGER

DANGER: contaminated parts

Contaminated parts can be detrimental to health and environment.

Before beginning to work, find out whether any parts are contaminated. Adhere to the relevant regulations and take the necessary precautions when handling contaminated parts.

Caution

Caution: vacuum component

Dirt and damages impair the function of the vacuum component.

When handling vacuum components, take appropriate measures to ensure cleanliness and prevent damages.

Caution

Caution: dirt sensitive area

Touching the product or parts thereof with bare hands increases the desorption rate.

Always wear clean, lint-free gloves and use clean tools when working in this area.

1. Vent the vacuum system.
2. Put the gauge out off operation.
3. Unfasten the lock screws and disconnect the sensor cable.
4. Remove the gauge from the vacuum system and install the protective lid.

6 Maintenance, Repair

Under clean operating conditions, the product requires no maintenance.

Gauge failures due to contamination or wear and tear are not covered by the warranty.
We recommend checking the zero at regular intervals (→ 25).

Agilent assumes no liability and the warranty becomes null and void if any repair work is carried out by the end-user or third parties.

7 Returning the Product

WARNING

WARNING: forwarding contaminated products

Contaminated products (e.g. radioactive, toxic, caustic or microbiological hazard) can be detrimental to health and environment.

Products returned to Agilent should preferably be free of harmful substances. Adhere to the forwarding regulations of all involved countries and forwarding companies and enclose a duly completed declaration of contamination.

Products that are not clearly declared as "free of harmful substances" are decontaminated at the expense of the customer.

Products not accompanied by a duly completed declaration of contamination are returned to the sender at his own expense.

8 Disposal

DANGER

DANGER: contaminated parts

Contaminated parts can be detrimental to health and environment.

Before beginning to work, find out whether any parts are contaminated. Adhere to the relevant regulations and take the necessary precautions when handling contaminated parts.

WARNING

WARNING: substances detrimental to the environment

Products or parts thereof (mechanical and electric components, operating fluids etc.) can be detrimental to the environment.

Dispose of such substances in accordance with the relevant local regulations.

Separating the components

After disassembling the product, separate its components according to the following criteria:

- Contaminated components

  Contaminated components (radioactive, toxic, caustic or biological hazard etc.) must be decontaminated in accordance with the relevant national regulations, separated according to their materials, and disposed of.

- Other components

  Such components must be separated according to their materials and recycled.

Further Information

🕮 [1] www.agilent.com
Operating Manual
AGC-100 Vacuum Gauge Controller
tqnb15e1
Agilent Technologies, Lexington, MA 02421, USA

🕮 [2] www.agilent.com
Communication Protocol
RS232C Interface
tqra76e1
Agilent Technologies, Lexington, MA 02421, USA

ETL Certification

3103457

ETL LISTED

The product CDG-500 complies with the requirements of the following Standards:
UL 61010-1, Issued: 2004/07/12 Ed: 2 Rev: 2005/07/22
CAN/CSA C22.2#61010-1, Issued: 2004/07/12

Notes

Vacuum Products Division
Instructions for returning products

Dear Customer:

Please follow these instructions whenever one of our products needs to be returned.

1) Complete the attached Request for Return form and send it to Agilent Technologies (see below), taking particular care to identify all products that have pumped or been exposed to any toxic or hazardous materials.

2) After evaluating the information, Agilent Technologies will provide you with a Return Authorization (RA) number via email or fax, as requested.
   Note: Depending on the type of return, a Purchase Order may be required at the time the Request for Return is submitted. We will quote any necessary services (evaluation, repair, special cleaning, eg).

3) Important steps for the shipment of returning product:
   - Remove all accessories from the core product (e.g. inlet screens, vent valves).
   - Prior to shipment, drain any oils or other liquids, purge or flush all gasses, and wipe off any excess residue.
   - If ordering an Advance Exchange product, please use the packaging from the Advance Exchange to return the defective product.
   - Seal the product in a plastic bag, and package product carefully to avoid damage in transit. You are responsible for loss or damage in transit.
   - Agilent Technologies is not responsible for returning customer provided packaging or containers.
   - Clearly label package with RA number. Using the shipping label provided will ensure the proper address and RA number are on the package. Packages shipped to Agilent without a RA clearly written on the outside cannot be accepted and will be returned.

4) Return only products for which the RA was issued.

5) Product being returned under a RA must be received within 15 business days.

6) Ship to the location specified on the printable label, which will be sent, along with the RA number, as soon as we have received all of the required information. Customer is responsible for freight charges on returning product.

7) Return shipments must comply with all applicable Shipping Regulations (IATA, DOT, etc.) and carrier requirements.

RETURN THE COMPLETED REQUEST FOR RETURN FORM TO YOUR NEAREST LOCATION:

EUROPE:	NORTH AMERICA:	PACIFIC RIM:
Fax: 00 39 011 9979 330		
Fax Free: 00 800 345 345 00	Fax: 1 781 860 9252	please visit our website for individual office information
Toll Free: 00 800 234 234 00	Toll Free: 800 882 7426, Option 3	
vpt-customercare@agilent.com	vpl-ra@agilent.com	http://www.agilent.com

Agilent Technologies

Vacuum Products Division
Request for Return Form
(Health and Safety Certification)

Please read important policy information on Page 3 that applies to all returns.

1) CUSTOMER INFORMATION

Company Name:	**Contact Name:**
Tel: **Email:**	**Fax:**
Customer Ship To:	**Customer Bill To:**
Europe only: **VAT reg. Number:**	USA/Canada only: ☐ **Taxable** ☐ **Non-taxable**

2) PRODUCT IDENTIFICATION

Product Description	Agilent P/N	Agilent S/N	Original Purchasing Reference

3) TYPE OF RETURN (Choose one from each row and supply Purchase Order if requesting a billable service)

3A. ☐ Non-Billable ☐ Billable ➡ New PO # (hard copy must be submitted with this form):

3B. ☐ Exchange ☐ Repair ☐ Upgrade ☐ Consignment/Demo ☐ Calibration ☐ Evaluation ☐ Return for Credit

4) HEALTH and SAFETY CERTIFICATION

AGILENT TECHNOLOGIES CANNOT ACCEPT ANY PRODUCTS CONTAMINATED WITH BIOLOGICAL OR EXPLOSIVE HAZARDS, RADIOACTIVE MATERIAL, OR MERCURY AT ITS FACILITY.
Call Agilent Technologies to discuss alternatives if this requirement presents a problem.

The equipment listed above (check one):

☐ **HAS NOT** pumped or been exposed to any toxic or hazardous materials. OR

☐ **HAS** pumped or been exposed to the following toxic or hazardous materials. If this box is checked, the following information must also be filled out. Check boxes for all materials to which product(s) pumped or was exposed:

☐ Toxic ☐ Corrosive ☐ Reactive ☐ Flammable ☐ Explosive ☐ Biological ☐ Radioactive

List all toxic/hazardous materials. Include product name, chemical name, and chemical symbol or formula:

_____

NOTE: If a product is received at Agilent which is contaminated with a toxic or hazardous material that was not disclosed, the customer will be held responsible for all costs incurred to ensure the safe handling of the product, and liable for any harm or injury to Agilent employees as well as to any third party occurring as a result of exposure to toxic or hazardous materials present in the product.

Print Name: **Authorized Signature:** _____ **Date:**

5) FAILURE INFORMATION:

Failure Mode (REQUIRED FIELD. See next page for suggestions of failure terms):
Detailed Description of Malfunction: (Please provide the error message)
Application (system and model):

I understand and agree to the terms of Section 6, Page 3/3.
Print Name: **Authorized Signature:** _____ **Date:**

Agilent Technologies

Vacuum Products Division
Request for Return Form
(Health and Safety Certification)

Please use these Failure Mode to describe the concern about the product on Page 2.

TURBO PUMPS and TURBO CONTROLLERS

APPARENT DEFECT/MALFUNCTION		POSITION	PARAMETERS	
• Does not start	• Noise	• Vertical	Power:	Rotational Speed:
• Does not spin freely	• Vibrations	-Horizontal	Current:	Inlet Pressure:
• Does not reach full speed	-Leak	-Upside-down	Temp 1:	Foreline Pressure:
• Mechanical Contact	-Overtemperature	-Other:	Temp 2:	Purge flow:
• Cooling defective	-Clogging	_____	OPERATING TIME:	

ION PUMPS/CONTROLLERS

• Bad feedthrough	• Poor vacuum
• Vacuum leak	• High voltage problem
• Error code on display	• Other

VALVES/COMPONENTS

• Main seal leak	• Bellows leak
• Solenoid failure	• Damaged flange
• Damaged sealing area	-Other

LEAK DETECTORS

• Cannot calibrate	-No zero/high backround
• Vacuum system unstable	• Cannot reach test mode
• Failed to start	• Other

INSTRUMENTS

• Gauge tube not working	• Display problem
• Communication failure	• Dogas not working
• Error code on display	• Other

SCROLL AND ROTARY VANE PUMPS

• Pump doesn't start	• Noisy pump (describe)
• Doesn't reach vacuum	• Over temperature
• Pump seized	• Other

DIFFUSION PUMPS

• Heater failure	• Electrical problem
• Doesn't reach vacuum	• Cooling coil damage
• Vacuum leak	• Other

Section 6) *ADDITIONAL TERMS*

Please read the terms and conditions below as they apply to all returns and are in addition to the Agilent Technologies Vacuum Product Division – Products and Services Terms of Sale.

- Customer is responsible for the freight charges for the returning product. Return shipments must comply with all applicable **Shipping Regulations** (IATA, DOT, etc.) and carrier requirements.
- Customers receiving an Advance Exchange product agree to return the defective, rebuildable part to Agilent Technologies **within 15 business days.** Failure to do so, or returning a non-rebuildable part (crashed), will result in an invoice for the non-returned/non-rebuildable part.
- Returns for credit toward the purchase of new or refurbished Products are subject to prior Agilent approval and may incur a restocking fee. Please reference the original purchase order number.
- Units returned for evaluation will be evaluated, and a quote for repair will be issued. If you choose to have the unit repaired, the cost of the evaluation will be deducted from the final repair pricing. A Purchase Order for the final repair price should be issued within 3 weeks of quotation date. Units without a Purchase Order for repair will be returned to the customer, and the evaluation fee will be invoiced.
- A Special Cleaning fee will apply to all exposed products per Section 4 of this document.
- If requesting a calibration service, units must be functionally capable of being calibrated.

Service & Support

North America
Agilent Technologies
121 Hartwell Avenue
Lexington, MA 02421 USA
Tel.: +1 781 861 7200
Toll-Free: +1 800 882 7426
Fax: +1 781 860 5437
vpl-customerservice@agilent.com

Benelux
Agilent Technologies Netherlands B.V.
Herculesweg 8
4338 PL Middelburg The Netherlands
Tel: +31 118 671570
Fax: +31 118 671569
Toll free: 00 800 234 234 00

China
Agilent Technologies (China) Co.Ltd
No.3, Wang Jing Bei Lu,
Chao Yang District, Beijing,
100102 China Tel.: +86
(10) 6439 7888
Fax: +86 (10) 6439 1318
Toll-Free: 800 820 8266
vpc-customerservice@agilent.com

France
Agilent Technologies France
7 avenue des Tropiques
Z.A. de Courtaboeuf – B.P. 12
91941 Les Ulis cedex France
Tel.: +33 (0) 1 69 86 38 84
Fax: +33 (0) 1 69 86 29 88
Toll free: 00 800 234 234 00
vpf.sales@agilent.com

Germany & Austria
Agilent Technologies
Lyoner Str. 20
60 528 Frankfurt am Main Germany
Tel.: +49 69 6773 43 2230
Fax: +49 69 6773 43 2250
Toll free: 00 800 234 234 00

India
Agilent Technologies India Pvt. Ltd.
601, Prime corporate Park,
230/231, Sakar Road,
Opp. Blue Dart Centre,
Andheri (East), Mumbai – 400 099 India
Tel: +91 22 30648287/8200
Fax: +91 22 30648250
Toll Free: 1800 113037
cag_india@agilent.com

Italy
Agilent Technologies Italia S.p.A.
via F.lli Varian 54
10040 Leini, (Torino) Italy
Tel.: +39 011 997 9111
Fax: +39 011 997 9350
Toll-Free: 00 800 234 234 00
vpt.sales@agilent.com
vpt-customerservice@agilent.com

Japan
Agilent Technologies Japan, Ltd.
8th Floor
Sumitomo Shibaura Building
4-16-36 Shibaura Minato-ku
Tokyo 108-0023 Japan
Tel.: +81 3 5232 1253
Toll-Free: 0120 655 040
Fax: +81 3 5232 1710
vpj-customerservice@agilent.com

Korea
Agilent Technologies Korea Ltd.
Shinsa 2nd Bldg. 2F
966-5 Daechi-dong
Kangnam-gu, Seoul Korea 135-280
Tel.: +82 2 3452 2455
Toll-Free: 080 222 2452
Fax: +82 2 3452 2451
vpk-customerservice@agilent.com

Singapore
Agilent Technologies Singapore Pte Ltd
No.1 Yishun Avenue 7 Singapore 768923
Tel: +65 6215 8045
Fax : +65 6754 0574
Toll-Free: 1 800 2762622
vps-customerservice@agilent.com

South East Asia
Agilent Technologies Sales Sdn Bhd
Unit 201, Level 2 uptown 2,
2 Jalan SS21/37, Damansara Uptown
47400 Petaling Jaya, Selangor, Malaysia
Tel : +603 7712 6106
Fax: +603 6733 8121
Toll-Free: 1 800 880 805
vps-customerservice@agilent.com

Taiwan
Agilent Technologies Taiwan Limited
20 Kao-Shuang Rd.,
Pin-Chen City, 324
Taoyuan Hsien, Taiwan, R.O.C.
Tel. +886 34959281
Toll Free: 0800 051 342
vpw-customerservice@agilent.com

UK & Ireland
Agilent Technologies UK Ltd
6 Mead Road
Oxford Industrial Park
Yarnton, Oxford OX5 1QU UK
Tel.: +44 (0) 1865 291570
Fax: +44 (0) 1865 291571
Toll free: 00 800 234 234 00
vpt-customerservice@agilent.com

JEVI VACUUM INSTRUMENTS

www.jevinstruments.com

Learn more:
www.agilent.com/chem/vacuum

Agilent Technologies

08/2012 BRxxx

t qna76e1